Contika

simex

INPUT / OUTPUT / POWER SUPPLY / COMMUNICATION MODULES

MultiCon

CMC-99/141

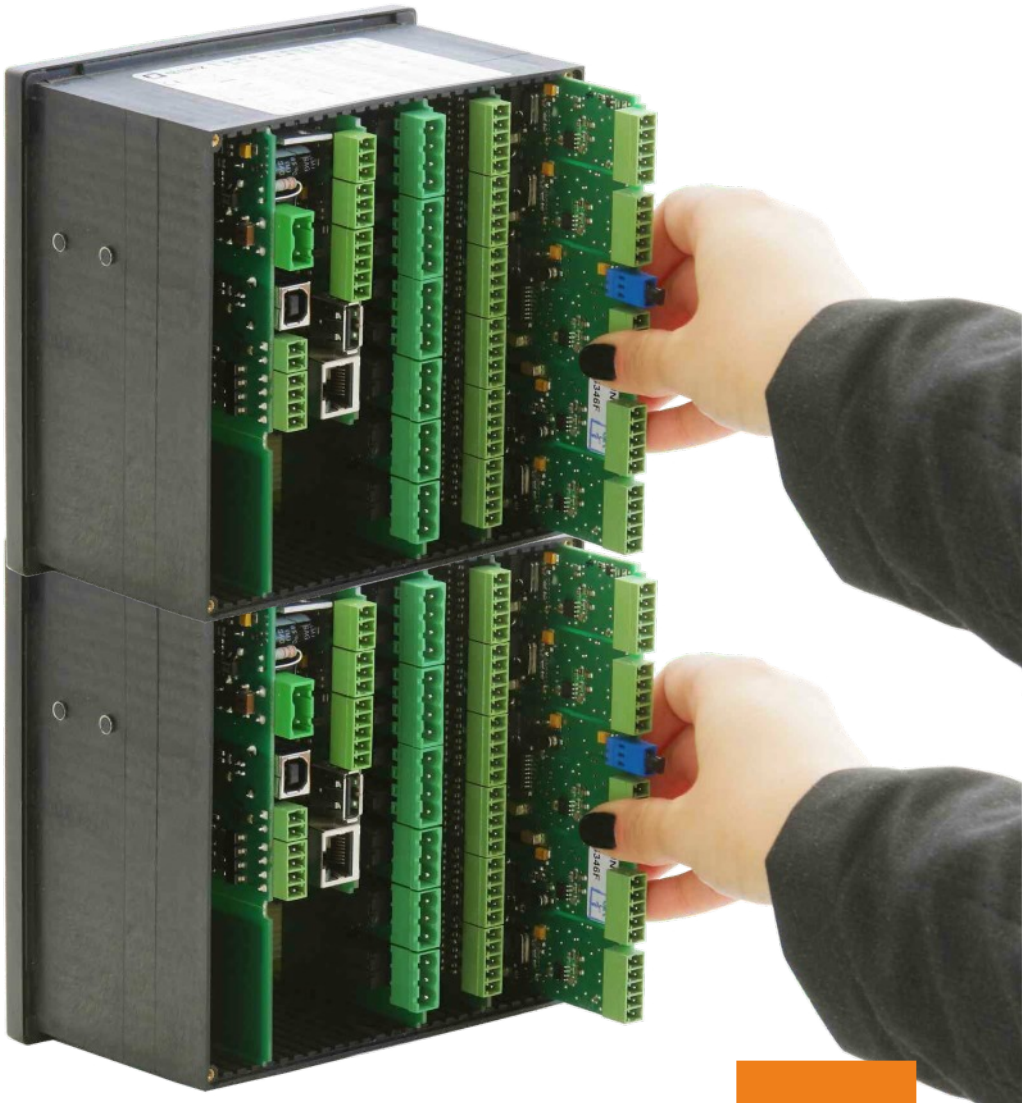

Measure,

Control and Log Data

MultiCon

Index

Power supply modules

PS32 5
PS42 5

Input modules

universal

EFUN4 6
EFUN6 6
QFUN4 7
QFUN6 7
UN3 8
UN5 8

current

I16 9
I24 9
IS6 9

voltage

U16..... 10
U24 10

voltage-current

UI4 11
UI8 11
UI12 11

voltage-current-resistance

UI4N8 12
UI8N8 12

voltage-current-digital

UI4D8 13
UI8D8 13

thermocouple

TC4 14
TC8 14
TC12 14

RTD

RT4 15
RT6 15

digital

D8 16
D16 16
D24 16

universal counters

CP2 17
CP4 17

hourmeters

HM2 18
HM4 18

analogue flowmeters

FI2 19
FI4 19

pulse flow or ratemeters

FT2 20
FT4 20

Output modules

current

IO2 21
IO4 21
IO6 21
IO8 21

SSR

S8 22
S16 22
S24 22

relay

R45 23
R65 23
R81 23
R121 23

Communication modules

ETU 24
ACM 24
USB Host 24

MultiCon

Controllers, data recorders, HMI

The MultiCon line includes advanced controllers and data recorders with great potential closed in small casings. MultiCon has been specifically designed for advanced applications in industrial automatic control engineering. It does not mean, however, that the device cannot be applied in smaller systems. MultiCon can be equipped with three isolated RS-485 interfaces which make it a perfect solution for distributed systems to work as CPU. Thanks to Ethernet interface the device can be monitored via the Internet. A wide range of input and output modules allows to customize CMC precisely as the customer requires it. Thanks to a colour touchscreen working with the user interface becomes a pleasure, while MultiCon operation playing the role of HMI is intuitive and comfortable. Our devices are LINUX-based products to ensure stable operation.

The biggest advantage of all devices from the MultiCon line is a big number of built-in inputs / outputs accessible in one compact device. The most developed version **CMC-99** has up to 48 measurement or digital inputs and 60 virtual channels whereas **CMC-141** has 50% more inputs / outputs and virtual channels.
Thanks to a well-thought-out module design you can choose among a wide range of modules and connect them to slots in the way you wish but you do not have to use all slots. You can also decide on your own how to use virtual channels, if they are going to be used for direct measurement readings, mathematical functions, timers, profile creation, set points or virtual objects.
What if one day you want to change your configuration, add new modules or change their slots? That's not a problem! All you have to do is to send your device to an authorized distributor who will perform the changes you require.

TECHNICAL DATA

	CMC-99	CMC-141
Power supply/consumption	19-50V DC, 16-35V AC or 85-260V AC/DC, typ. 15 VA, max. 20 VA	19-50V DC, 16-35V AC or 85-260V AC/DC, typ. 25 VA, max. 35 VA
Display	3.5” graphic TFT, 16-bit colour, 320 x 240 pxs, touchscreen navigation	5.7” graphic TFT, 16-bit colour, 320 x 240 pxs, touchscreen navigation
Measurement inputs	• up to 12 universal, isolated or unisolated: 0/4 ÷ 20 mA; 0/1 ÷ 5V, 0/2 ÷ 10V, 0 ÷ 30V; thermocouples: J, K, S, T, N, R, B, E (PN-EN), L (GST); -10 ÷ 25 mV, -10 ÷ 100 mV, 0 ÷ 600 mV; RTD (2/3/4 wire): Pt100, Pt500, Pt1000 (PN-EN), Pt'50, Pt'100, Pt'500 (GOST), Ni100, Ni500, Ni1000 (PN-EN), Cu50, Cu100 (PN-83M-53852), Cu'50, Cu'100 (PN-83M-53852); resistance 0 ÷ 300 Ω, resistance 0 ÷ 3 kΩ • up to 48 analogue: 0/4 ÷ 20 mA, 0/1 ÷ 5V, 0/2 ÷ 10V • up to 24 thermocouples: J, K, S, T, N, R, B, E (PN-EN); L (GST); ± 25 mV, ± 100 mV, -10 ÷ 25 mV, -10 ÷ 100 mV • up to 12 RTD: Pt100, Pt500, Pt1000 (PN-EN); Pt'50, Pt'100, Pt'500 (GOST); Ni100, Ni500, Ni1000 (PN-EN); Cu50, Cu100 (PN-83M-53852); Cu'50, Cu'100 (PN-83M-53852); 0 ÷ 300 Ω, 0 ÷ 3 kΩ • up to 24 NTC: 0 ÷ 110 kΩ • up to 12 counters: max. freq. 5 kHz • up to 12 digital flowmeter / ratemeter: max. freq. 50 kHz • up to 12 analogue flowmeter: 0/4 ÷ 20 mA • mixed inputs: analogue-NTC temperature or analogue-digital: up to 12 x 0 ÷ 20 mA, 4 ÷ 20 mA and up to 12 x 0 ÷ 5V, 1 ÷ 5V, 0 ÷ 10V, 2 ÷ 10V and up to 24 x NTC or digital	• up to 18 universal, isolated or unisolated: 0/4 ÷ 20 mA; 0/1 ÷ 5V, 0/2 ÷ 10V, 0 ÷ 30V; thermocouples: J, K, S, T, N, R, B, E (PN-EN), L (GST); -10 ÷ 25 mV, -10 ÷ 100 mV, 0 ÷ 600 mV; RTD (2/3/4 wire): Pt100, Pt500, Pt1000 (PN-EN), Pt'50, Pt'100, Pt'500 (GOST), Ni100, Ni500, Ni1000 (PN-EN), Cu50, Cu100 (PN-83M-53852), Cu'50, Cu'100 (PN-83M-53852); resistance 0 ÷ 300 Ω, resistance 0 ÷ 3 kΩ • up to 72 analogue: 0/4 ÷ 20 mA, 0/1 ÷ 5V, 0/2 ÷ 10V • up to 36 thermocouples: J, K, S, T, N, R, B, E (PN-EN); L (GST); ± 25 mV, ± 100 mV, -10 ÷ 25 mV, -10 ÷ 100 mV • up to 18 RTD: Pt100, Pt500, Pt1000 (PN-EN); Pt'50, Pt'100, Pt'500 (GOST); Ni100, Ni500, Ni1000 (PN-EN); Cu50, Cu100 (PN-83M-53852); Cu'50, Cu'100 (PN-83M-53852); 0 ÷ 300 Ω, 0 ÷ 3 kΩ • up to 24 NTC: 0 ÷ 110 kΩ • up to 12 counters: max. freq. 5 kHz • up to 12 digital flowmeter / ratemeter: max. freq. 50 kHz • up to 18 analogue flowmeter: 0/4 ÷ 20 mA • mixed inputs: analogue-NTC temperature or analogue-digital: up to 24 x 0 ÷ 20 mA, 4 ÷ 20 mA and up to 24 x 0 ÷ 5V, 1 ÷ 5V, 0 ÷ 10V, 2 ÷ 10V and up to 24 x NTC or digital
Digital inputs	• up to 49 *	• up to 73 *
Outputs	• up to 8 analogue 4 ÷ 20 mA, passive, isolated, resolution 12 bit • up to 16 SPST relay 1A/250V • up to 4 SPDT relay 5A/250V • up to 48 SSR	• up to 24 analogue 4 ÷ 20 mA, passive, isolated, resolution 12 bit • up to 36 SPST relay 1A/250V • up to 18 SPDT relay 5A/250V • up to 72 SSR
Sensor supply output	• 1 x 24V DC ±5%, 200 mA max.	• 1 x 24V DC ±5%, 200 mA max.
Communication interface	**Basic version**: RS-485, 1 x USB Host, **ETU**: 1 or 2 x USB Host, 1 x Ethernet **ACM**: 2 x RS-485, 1 x RS-485/232, 1 or 2 x USB Host, 1 x Ethernet	**Basic version**: RS-485, 1 x USB Host, **ETU**: 1 or 2 x USB Host, 1 x Ethernet **ACM**: 2 x RS-485, 1 x RS-485/232, 1 or 2 x USB Host, 1 x Ethernet
Protocols	Modbus RTU Master/Slave, Modbus TCP Server, HTTP, Web Server, NTP	Modbus RTU Master/Slave, Modbus TCP Server, HTTP, Web Server, NTP
IP rate protection	IP 65 (device front side), options: IP 65 version including gasket for panel cut-out sealing or IP 54 transparent door with key; IP 40 (front USB version)	IP 65 (device front side), optional IP 65 version including gasket for panel cut-out sealing or IP 54 transparent door with key; IP 40 (front USB version)
Operating temp. **Storage temp.**	0°C ÷ +50°C (optional -20°C ÷ +50°C) -10°C ÷ +70°C (optional -20°C ÷ +70°C)	0°C ÷ +50°C (optional -20°C ÷ +50°C) -10°C ÷ +70°C (optional -20°C ÷ +70°C)
Data memory **Data recording speed**	internal 2 GB (option 4 GB) from 0.1 s to 24 h with resolution 0.1 s	internal 2 GB (option 4 GB) from 0.1 s to 24 h with resolution 0.1 s
Dimensions	case (WxHxD): 96 x 96 x 100 mm; panel cut-out: 90.5 x 90.5 mm	case (WxHxD): 144 x 144 x 100 mm; panel cut-out: 137 x 137 mm

** one digital input is available in standard, integrated on PS32 or PS42 power supply.*

MultiCon

MultiCon CMC-XX-P/D/C/B/A-XXX

version:
99 : 96 x 96 mm case
141 : 144 x 144 mm case

memory:
0: 2 GB
1: 4 GB

slot P - power supply module

slot D - communication module

slot A - I/O module

slot B - I/O module

slot C - I/O module

available modules listed below

options:
01: no options
0C: PCB conformal coating
11: IP 65 gasket
1C: IP 65 gasket + PCB conformal coating
81: operating temp. -20°C ÷ +50°C + PCB conformal coating
B1: front USB Host (IP 40)
BC: front USB Host (IP 40) + PCB conformal coating
P1: IP 65 gasket + operating temp. -20°C ÷ +50°C + PCB conformal coating
K1: front USB Host (IP 40) + operating temp. -20°C ÷ +50°C + PCB conformal coating

Optional: **LKS-99/141** Data logging licence key
ENS-99/141 „E-mail notifications" licence key

Module type	Description	MultiCon CMC-99							MultiCon CMC-141					
		P	D	C	B	A	P	D	C	B	A			
PS32	19 ÷ 50V DC, 16 ÷ 35V AC power supply, 1 x digital input, 1 x RS-485	•							•					
PS42	85 ÷ 260V AC/DC power supply, 1 x digital input, 1 x RS-485	•							•					
E	no communication module (available for 0B option only)			•							•			
ETU	communication module: 1 x USB Host, 1 x Ethernet 10 Mb/s			•							•			
ACM	advanced communication module: 1 x RS-485, 1 x RS-485/232, 1 x USB Host, 1 x Ethernet 10 Mb/s			•							•			
USB	USB port (back)			•							•			
E	empty slot				•	•	•					•	•	•
EFUN4	4 x universal inputs U/I/RTD/TC/mV (incl. totalizer on 0/4 ÷ 20 mA input), non-isolated				•	•	•					•	•	•
EFUN6	6 x universal inputs U/I/RTD/TC/mV (incl. totalizer on 0/4 ÷ 20 mA input), non-isolated											•	•	•
QFUN4	4 x universal inputs U/I/RTD/TC/mV (incl. totalizer on 0/4 ÷ 20 mA input), isolated, new				•	•	•					•	•	•
QFUN6	6 x universal inputs U/I/RTD/TC/mV (incl. totalizer on 0/4 ÷ 20 mA input), isolated, new											•	•	•
UN3	3 x universal inputs U/I/RTD/TC/mV, isolated				•	•	•					•	•	•
UN5	5 x universal inputs U/I/RTD/TC/mV, isolated											•	•	•
I16	16 x current inputs				•	•	•					•	•	•
I24	24 x current inputs											•	•	•
IS6	6 x current (4 ÷ 20 mA) inputs, isolated				•	•	•					•	•	•
U16	16 x voltage inputs				•	•	•					•	•	•
U24	24 x voltage inputs											•	•	•
UI4	4 x voltage inputs + 4 x current inputs				•	•	•					•	•	•
UI8	8 x voltage inputs + 8 x current inputs				•	•	•					•	•	•
UI12	12 x voltage inputs + 12 x current inputs											•	•	•
UI4N8	4 x voltage inputs + 4 x current inputs + 8 x NTC inputs				•	•	•					•	•	•
UI4D8	4 x voltage inputs + 4 x current inputs + 8 x digital inputs				•	•	•					•	•	•
UI8N8	8 x voltage inputs + 8 x current inputs + 8 x NTC inputs											•	•	•
UI8D8	8 x voltage inputs + 8 x current inputs + 8 x digital inputs											•	•	•
RT4	4 x RTD inputs				•	•	•					•	•	•
RT6	6 x RTD inputs											•	•	•
TC4	4 x TC inputs				•	•	•					•	•	•
TC8	8 x TC inputs				•	•	•					•	•	•
TC12	12 x TC inputs											•	•	•
D8	8 x digital inputs, isolated				•	•	•					•	•	•
D16	16 x digital inputs, isolated				•	•	•					•	•	•
D24	24 x digital inputs, isolated											•	•	•
CP2	2 x pulse inputs, universal counters, isolated				•	•	•					•	•	•
CP4	4 x pulse inputs, universal counters, isolated				•	•	•					•	•	•
HM2	2 x hourmeters, isolated				•	•	•					•	•	•
HM4	4 x hourmeters, isolated				•	•	•					•	•	•
FT2	2 x pulse inputs (flowmeter/ratemeter), isolated + 2 x current inputs				•	•	•					•	•	•
FT4	4 x pulse inputs (flowmeter/ratemeter), isolated + 4 x current inputs				•	•	•					•	•	•
FI2	2 x current inputs (flowmeter/ratemeter) + 2 x current inputs				•	•	•					•	•	•
FI4	4 x current inputs (flowmeter/ratemeter) + 4 x current inputs				•	•	•					•	•	•
R81	8 x SPST relay 1A outputs				•	•*						•	•	•
R121	12 x SPST relay 1A outputs											•	•	•
R45	4 x SPDT relay 5A outputs				•							•	•	•
R65	6 x SPDT relay 5A outputs											•	•	•
S8	8 x SSR driver outputs				•	•	•					•	•	•
S16	16 x SSR driver outputs				•	•	•					•	•	•
S24	24 x SSR driver outputs											•	•	•
IO2	2 x 4 ÷ 20 mA outputs, isolated				•	•						•	•	•
IO4	4 x 4 ÷ 20 mA outputs, isolated				•	•						•	•	•
IO6	6 x 4 ÷ 20 mA outputs, isolated											•	•	•
IO8	8 x 4 ÷ 20 mA outputs, isolated											•	•	•

* The installation of the R81 module in slot B only in the case where in the slot C another relay module (R81 or R45) was installed.

MultiCon

Power supply modules

- **PS32**: 19V ÷ 50V DC; 16V ÷ 35V AC
- **PS42**: 85V ÷ 260V DC or AC

PS42

PS32 and **PS42** modules are used to supply the MultiCon.
PS32 module can be supplied with:
19V ÷ 50V DC
16V ÷ 35V AC

PS42 module can be supplied with:
85V ÷ 260V DC or AC

Additionally modules contain:
- service purpose input (service port),
- 24V DC output, used to supply external sensors,
- digital input, used for digital signal measurement,
- RS-485 port, used for communication with other devices using Modbus protocol.

MODULE PIN ASSIGNMENT

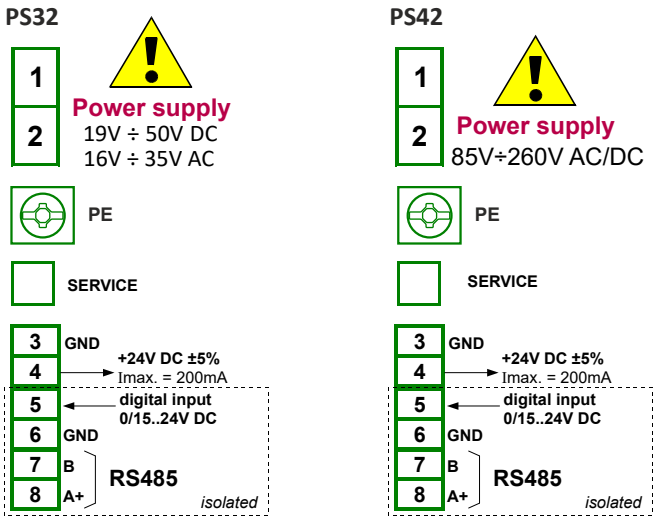

Pin description:
1, 2 : power supply connectors - supply voltage depends on version, but polarization is irrelevant,
3 : ground for voltage output,
4 : +24V DC output, used to power external sensors,
5 : digital input - used to measure digital signals,
6 : ground for connectors 5, 7, 8,
7, 8 : data inputs for RS-485

TECHNICAL DATA

	PS32	PS42
Number of inputs/outputs	5	5
Power supply	19V...**24**...50V DC; 16V...**24**...35V AC	85V...**230**...260 AC/DC; 50-60 Hz
USB Service	Service port	Service port
Sensor supply output	24V DC ±5% / max. 200 mA	24V DC ±5% / max. 200 mA
Digital input	0...15...24V DC with galvanic isolation (low state: 0 ÷ 1V, high state: 8 ÷ 24V) power consumption: 7,5 mA / 24V isolation strenght: 1 min @ 500V DC	0...15...24V DC with galvanic isolation (low state: 0 ÷ 1V, high state: 8 ÷ 24V) power consumption: 7,5 mA / 24V isolation strenght: 1 min @ 500V DC
Interface	RS-485, Modbus RTU, 1200 ÷ 115200 bit/sec.	RS-485, Modbus RTU, 1200 ÷ 115200 bit/sec.
Weight	81 g	91 g
Part number	M99-PS32-001	M99-PS42-001

MultiCon

Input modules - universal with totalizer

- **EFUN4**: 4 unisolated universal inputs
- **EFUN6**: 6 unisolated universal inputs

On customer's request, it is possible to install modules equipped with 4 or 6 universal unisolated inputs (incl. totalizer on 0/4 ÷ 20 mA input). Each module includes a sensor for cold junction compensation. It is one of the most advanced input modules, available for the MultiCon. With its help user can make many different kind of measurements in each channel. This module can measure: voltage, current, flow (analog), temperatures (TC or RTD), digital signals (TTL or HTL).

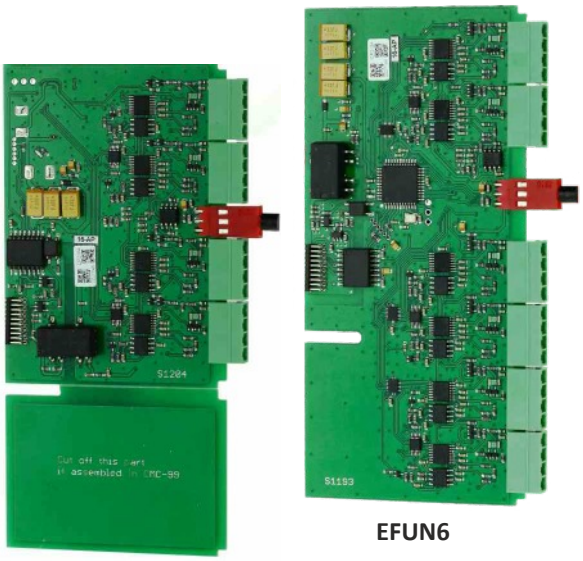

EFUN4 EFUN6

EFUN modules parameters are:
- **Name** - read-only input name given by the device,
- **Unit** - read-only field („°C", „mA", „V", „Ohm" or „mV"), depending on **Mode** parameter settings,
- **Mode** - allows to set operation mode, eg. select a type of thermocouple or mV measurement range or other,
- **Low limit** - defines measurement level below which in logical channel „Lo" state will be displayed,
- **High limit** - defines measurement level above which in logical channel „Hi" state will be displayed,
- **Wire compensation** - menu which allows to compensate measurement errors, which can be caused by wrong sensor readings, options: compensation mode (allows to choose parameter which will be used in compensation process), disable (compensation is not active), manual (allows to compensate sensor constant offset),
- **Actual temperature** - parameter in which user enters actual temperature near the sensor, which is measured by more reliable thermometer.

MODULE PIN ASSIGNMENT

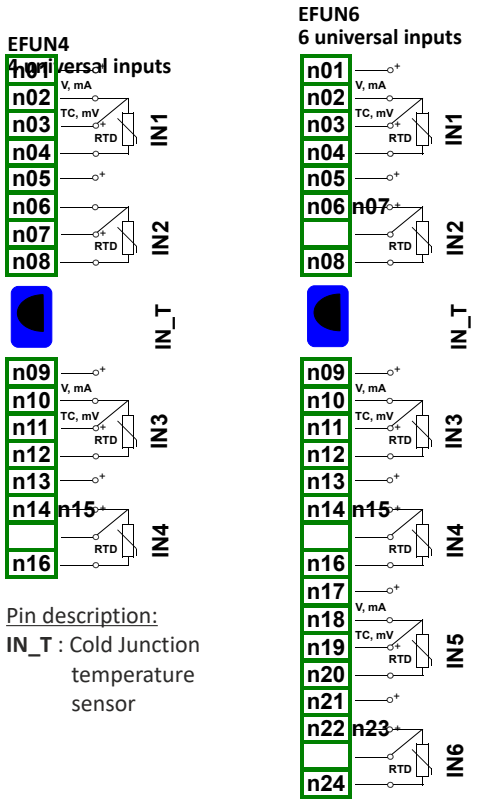

Pin description:
IN_T : Cold Junction temperature sensor

TECHNICAL DATA

	EFUN4	EFUN6
Number of inputs	4 (unisolated)	6 (unisolated)
Measurement ranges **current inputs:** **voltage inputs:** **digital inputs:** **thermocouple inputs:** **RTD inputs: (2, 3, 4-wire)** **resistance input:**	 0 ÷ 20 mA, 4 ÷ 20 mA 0 ÷ 5V, 1 ÷ 5V, 0 ÷ 10V, 2 ÷ 10V, 0 ÷ 30V, -10 ÷ 25mV, -10 ÷ 100mV, 0 ÷ 600mV TTL (Lo: 0 ÷ 0.8V; Hi: 2 ÷ 5.5V), HTL (Lo: 0 ÷ 4.2V; Hi: 11.5 ÷ 30V) J, K, S, T, N, R, B, E (PN-EN), L (GOST) Pt100, Pt500, Pt1000 (PN-EN), Pt'50, Pt'100, Pt'500 (GOST), Ni100, Ni500, Ni1000 (PN-EN), Cu50, Cu100 (PN-83M-53852), Cu'50, Cu'100 (PN-83M-53852) 0-300 Ω, 0-3 kΩ	 0 ÷ 20 mA, 4 ÷ 20 mA 0 ÷ 5V, 1 ÷ 5V, 0 ÷ 10V, 2 ÷ 10V, 0 ÷ 30V, -10 ÷ 25mV, -10 ÷ 100mV, 0 ÷ 600mV TTL (Lo: 0 ÷ 0.8V; Hi: 2 ÷ 5.5V), HTL (Lo: 0 ÷ 4.2V; Hi: 11.5 ÷ 30V) J, K, S, T, N, R, B, E (PN-EN), L (GOST) Pt100, Pt500, Pt1000 (PN-EN), Pt'50, Pt'100, Pt'500 (GOST), Ni100, Ni500, Ni1000 (PN-EN), Cu50, Cu100 (PN-83M-53852), Cu'50, Cu'100 (PN-83M-53852) 0-300 Ω, 0-3 kΩ
Sampling period	current, voltage, thermocouple inputs: 450 ms RTD, resistance inputs: 1020 ms	current, voltage, thermocouple inputs: 450 ms RTD, resistance inputs: 1020 ms
Precision	0,15% @ 25˚C (for -10 ÷ 25 mV); 0,1% @ 25˚C (others ranges)	0,15% @ 25˚C (for -10 ÷ 25 mV); 0,1% @ 25˚C (others ranges)
Input impedance	current inputs: <65 Ω (30 Ω typ.) voltage inputs: >100 kΩ (while maintaining correct polarization) TC inputs: ≥6 MΩ, RTD inputs: 4 kΩ	current inputs: <65 Ω (30 Ω typ.) voltage inputs: >100 kΩ (while maintaining correct polarization) TC inputs: ≥6 MΩ, RTD inputs: 4 kΩ
Weight	40 g	45 g
Part number	M99-EFUN4-001	M141-EFUN6-001

MultiCon

Input modules - universal with totalizer

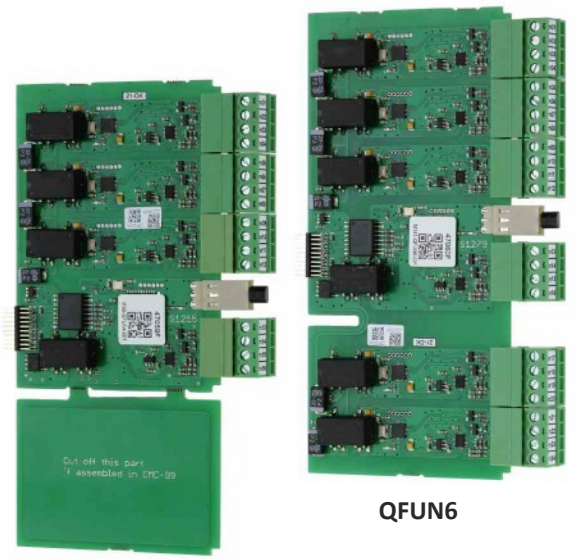

QFUN6

QFUN4

- **QFUN4**: 4 isolated universal inputs
- **QFUN6**: 6 isolated universal inputs

On customer's request, it is possible to install modules equipped with 4 or 6 universal isolated inputs (incl. totalizer on 0/4 ÷ 20 mA input). Each module includes a sensor for cold junction compensation. It is one of the most advanced input modules, available for the MultiCon. With its help user can make many different kind of measurements in each channel. This module can measure: voltage, current, flow (analog), temperatures (TC or RTD), digital signals (TTL or HTL).

QFUN modules parameters are:
- **Name** - read-only input name given by the device,
- **Unit** - read-only field („°C", „mA", „V", „Ohm" or „mV"), depending on **Mode** parameter settings,
- **Mode** - allows to set operation mode, eg. select a type of thermocouple or mV measurement range or other,
- **Low limit** - defines measurement level below which in logical channel „Lo" state will be displayed,
- **High limit** - defines measurement level above which in logical channel „Hi" state will be displayed,
- **Wire compensation** - menu which allows to compensate measurement errors, which can be caused by wrong sensor readings, options: compensation mode (allows to choose parameter which will be used in compensation process), disable (compensation is not active), manual (allows to compensate sensor constant offset),
- **Actual temperature** - parameter in which user enters actual temperature near the sensor, which is measured by more reliable thermometer.

MODULE PIN ASSIGNMENT

QFUN4
4 universal inputs

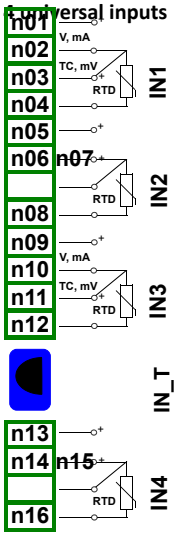

Pin description:
IN_T : Cold Junction temperature sensor

QFUN6
6 universal inputs

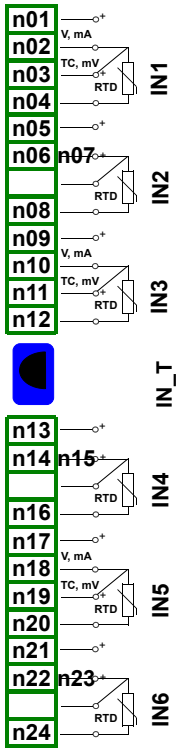

TECHNICAL DATA

	QFUN4	QFUN6
Number of inputs	4 (isolated)	6 (isolated)
Measurement ranges		
current inputs:	0 ÷ 20 mA, 4 ÷ 20 mA	0 ÷ 20 mA, 4 ÷ 20 mA
voltage inputs:	0 ÷ 5V, 1 ÷ 5V, 0 ÷ 10V, 2 ÷ 10V, 0 ÷ 30V, -10 ÷ 25mV, -10 ÷ 100mV, 0 ÷ 600mV	0 ÷ 5V, 1 ÷ 5V, 0 ÷ 10V, 2 ÷ 10V, 0 ÷ 30V, -10 ÷ 25mV, -10 ÷ 100mV, 0 ÷ 600mV
digital inputs:	TTL (Lo: 0 ÷ 0.8V; Hi: 2 ÷ 5.5V), HTL (Lo: 0 ÷ 4.2V; Hi: 11.5 ÷ 30V)	TTL (Lo: 0 ÷ 0.8V; Hi: 2 ÷ 5.5V), HTL (Lo: 0 ÷ 4.2V; Hi: 11.5 ÷ 30V)
thermocouple inputs:	J, K, S, T, N, R, B, E (PN-EN), L (GOST)	J, K, S, T, N, R, B, E (PN-EN), L (GOST)
RTD inputs: (2, 3, 4-wire)	Pt100, Pt500, Pt1000 (PN-EN), Pt'50, Pt'100, Pt'500 (GOST), Ni100, Ni500, Ni1000 (PN-EN), Cu50, Cu100 (PN-83M-53852), Cu'50, Cu'100 (PN-83M-53852)	Pt100, Pt500, Pt1000 (PN-EN), Pt'50, Pt'100, Pt'500 (GOST), Ni100, Ni500, Ni1000 (PN-EN), Cu50, Cu100 (PN-83M-53852), Cu'50, Cu'100 (PN-83M-53852)
resistance input:	0-300 Ω, 0-3 kΩ	0-300 Ω, 0-3 kΩ
Sampling period	current, voltage, thermocouple inputs: 450 ms RTD, resistance inputs: 920 ms	current, voltage, thermocouple inputs: 450 ms RTD, resistance inputs: 920 ms
Precision	0,15% @ 25˚C (for -10 ÷ 25 mV); 0,1% @ 25˚C (others ranges)	0,15% @ 25˚C (for -10 ÷ 25 mV); 0,1% @ 25˚C (others ranges)
Input impedance	current inputs: <65 Ω (30 Ω typ.) voltage inputs: >100 kΩ (while maintaining correct polarization) TC inputs: ≥6 MΩ, RTD inputs: 4 kΩ	current inputs: <65 Ω (30 Ω typ.) voltage inputs: >100 kΩ (while maintaining correct polarization) TC inputs: ≥6 MΩ, RTD inputs: 4 kΩ
Weight	64 g	82 g
Part number	M99-EFUN4-001	M141-EFUN6-001

MultiCon

Input modules - universal

- **UN3**: 3 isolated universal inputs
- **UN5**: 5 isolated universal inputs

On customer's request, it is possible to install modules equipped with 3 or 5 universal inputs. Each module includes a sensor for cold junction compensation. It is one of the most advanced input modules, available for the MultiCon. With its help user can make many different kind of measurements in each channel. This module can measure: voltage, current, resistance, temperature using resistance sensors or thermocouples.

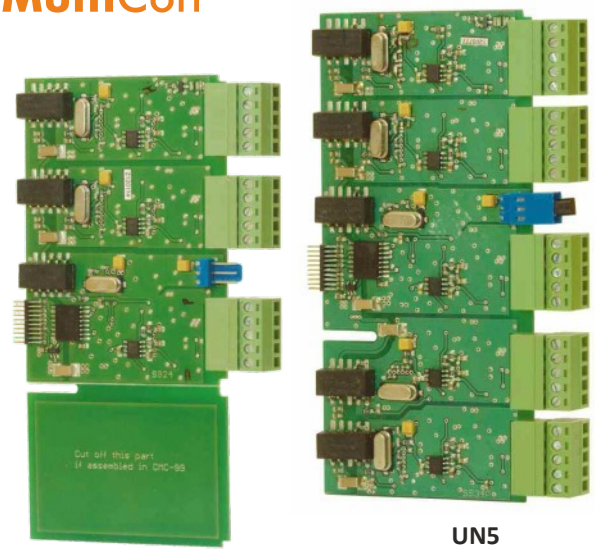

UN3 UN5

UN modules parameters are:
- **Name** - read-only input name given by the device,
- **Unit** - read-only field („°C", „mA", „V", „Ohm" or „mV"), depending on **Mode** parameter settings,
- **Mode** - allows to set operation mode, eg. select a type of thermocouple or mV measurement range or other,
- **Low limit** - defines measurement level below which in logical channel „Lo" state will be displayed,
- **High limit** - defines measurement level above which in logical channel „Hi" state will be displayed,
- **Wire compensation** - menu which allows to compensate measurement errors, which can be caused by wrong sensor readings, options: compensation mode (allows to choose parameter which will be used in compensation process), disable (compensation is not active), manual (allows to compensate sensor constant offset),
- **Actual temperature** - parameter in which user enters actual temperature near the sensor, which is measured by more reliable thermometer.

MODULE PIN ASSIGNMENT

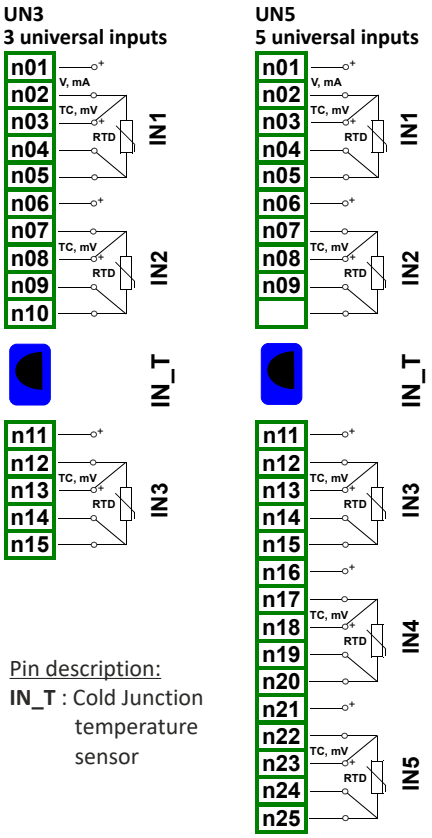

Pin description:
IN_T : Cold Junction temperature sensor

TECHNICAL DATA

	UN3	UN5
Number of inputs	3 (isolated)	5 (isolated)
Measurement ranges **current inputs:** **voltage inputs:** **thermocouple inputs:** **RTD inputs: (2, 3, 4-wire)** **resistance input:**	 0 ÷ 20 mA, 4 ÷ 20 mA 0 ÷ 5V, 1 ÷ 5V, 0 ÷ 10V, 2 ÷ 10V, -10 ÷ 25mV, -10 ÷ 100mV, 0 ÷ 600mV J, K, S, T, N, R, B, E (PN-EN), L (GOST) Pt100, Pt500, Pt1000 (PN-EN), Pt'50, Pt'100, Pt'500 (GOST), Ni100, Ni500, Ni1000 (PN-EN), Cu50, Cu100 (PN-83M-53852), Cu'50, Cu'100 (PN-83M-53852) 0-300 Ω, 0-3 kΩ	 0 ÷ 20 mA, 4 ÷ 20 mA 0 ÷ 5V, 1 ÷ 5V, 0 ÷ 10V, 2 ÷ 10V, -10 ÷ 25mV, -10 ÷ 100mV, 0 ÷ 600mV J, K, S, T, N, R, B, E (PN-EN), L (GOST) Pt100, Pt500, Pt1000 (PN-EN), Pt'50, Pt'100, Pt'500 (GOST), Ni100, Ni500, Ni1000 (PN-EN), Cu50, Cu100 (PN-83M-53852), Cu'50, Cu'100 (PN-83M-53852) 0-300 Ω, 0-3 kΩ
Sampling period	current, voltage, thermocouple inputs: 535 ms RTD, resistance inputs: 1410 ms	current, voltage, thermocouple inputs: 535 ms RTD, resistance inputs: 1410 ms
Precision	0,15% @ 25˚C (for -10 ÷ 25 mV); 0,1% @ 25˚C (others ranges)	0,15% @ 25˚C (for -10 ÷ 25 mV); 0,1% @ 25˚C (others ranges)
Input impedance	current inputs: <65 Ω (30 Ω typ.) voltage inputs: >100 kΩ (while maintaining correct polarization) TC inputs: >1,5 MΩ	current inputs: <65 Ω (30 Ω typ.) voltage inputs: >100 kΩ (while maintaining correct polarization) TC inputs: >1,5 MΩ
Weight	74 g	77 g
Part number	M99-UN3-001	M141-UN5-001

MultiCon

Input modules - current

- **I16**: 16 current inputs
- **I24**: 24 current inputs
- **IS6**: 6 isolated current inputs

MultiCon can be equipped with modules having 16 or 24 non isolated or 6 isolated current inputs. To make sensor connection easier, modules **I16** and **I24** have inputs groupped into fours. **IS6** module has all inputs separated one from another and signal polarity on it's inputs has no matter.

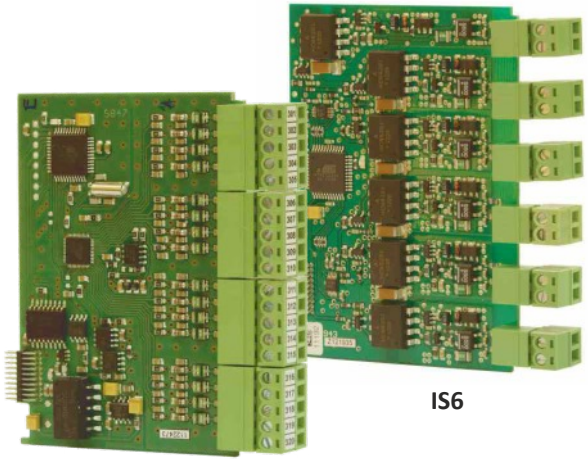

IS6

I16

All GND terminals in the **I16** and **I24** modules are common but separated from power supply and other modules.

Current inputs parameters are:
- **Name** - read-only input name given by the device,
- **Unit** - read-only field which displays measurement unit „mA”,
- **Mode** - defines measurement range (0-20 or 4-20),
- **Low limit** - defines measurement low limit, below which the device returns „Lo” value,
- **High limit** - defines measurement high limit, above which the device returns „Hi” value.

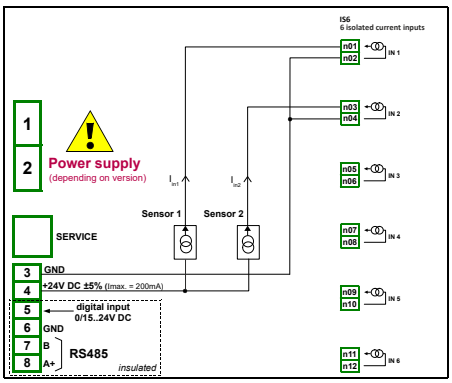

Examplary connection for 2 - wire sensors and IS6 module

MODULE PIN ASSIGNMENT

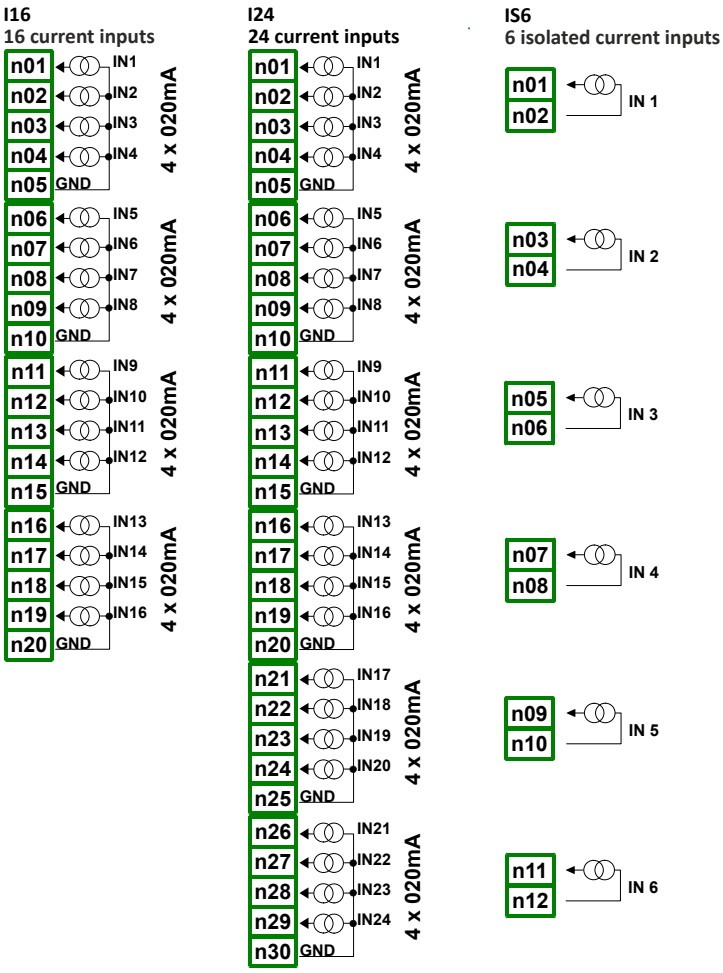

TECHNICAL DATA

	I16	I24	IS6
Number of inputs	16	24	6 (isolated)
Measurement range Hardware limitation	0 ÷ 20 mA, 4 ÷ 20 mA 0 mA ÷ 24 mA	0 ÷ 20 mA, 4 ÷ 20 mA 0 mA ÷ 24 mA	4 ÷ 20 mA 3 mA ÷ 30 mA
Resolution	1 µA	1 µA	1 µA
Precision	0.1% @ 25°C	0.1% @ 25°C	0.25% @ 25°C
Temperature stability	50 ppm/˚C	50 ppm/˚C	65 ppm/˚C
Internal impedance	type 100 Ω	type 100 Ω	type 1750 Ω @ 4 mA; type 400 Ω @ 20 mA
Protection	50 mA, auto-reset fuse	50 mA, auto-reset fuse	50 mA, auto-reset fuse
Sampling period	10 ms *	10 ms *	100 ms
Weight	42,5 g	63 g	39 g
Part number	M99-I16-001	M141-I24-001	M99-IS6-001

** CMC reads data from modules every 100 ms*

MultiCon

Input modules - voltage

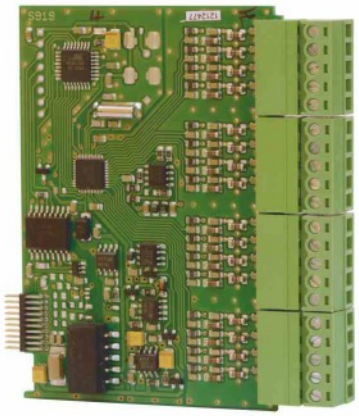

U16

- **U16**: 16 voltage inputs
- **U24**: 24 voltage inputs

On customer's request, the MultiCon device can be equipped with 16 or 24 voltage input modules.
To make sensor connection easier, inputs are grouped and all ground terminals are common but separated from power supply and other modules.

Voltage input parameters are:
- **Name** - read-only input name given by the device,
- **Unit** - read-only field which displays measurement unit „V”,
- **Mode** - defines measurement range (0 - 5V, 1 - 5V, 0 - 10V, 2 - 10V),
- **Low limit** - defines measurement level below which in logical channel „Lo” state will be displayed,
- **High limit** - defines measurement level above which in logical channel „Hi” state will be displayed.

Connections for 3 - wire sensor (voltage)

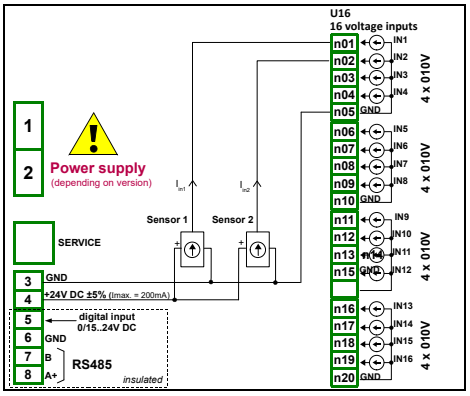

MODULE PIN ASSIGNMENT

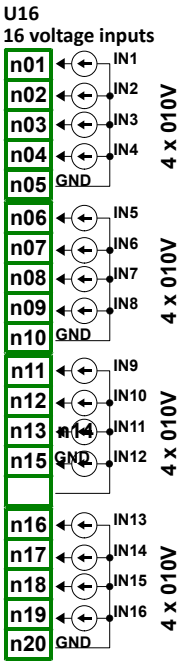

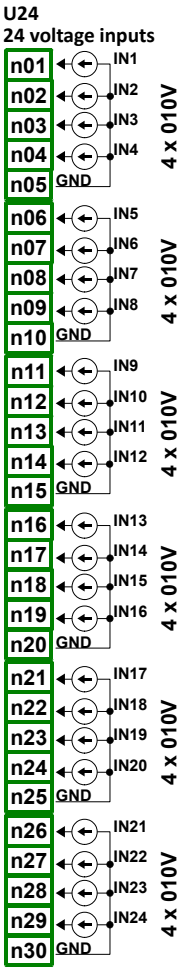

TECHNICAL DATA

	U16	U24
Number of inputs	16	24
Measurement range Hardware limitation	0 ÷ 5V, 1 ÷ 5V, 0 ÷ 10V, 2 ÷ 10V 0V ÷ 12V	0 ÷ 5V, 1 ÷ 5V, 0 ÷ 10V, 2 ÷ 10V 0V ÷ 12V
Hardware resolution	1 mV	1 mV
Precision	0.1% @ 25°C	0.1% @ 25°C
Temperature stability	50 ppm/˚C	50 ppm/˚C
Internal impedance	50 kΩ	50 kΩ
Sampling period	10 ms (CMC reads modules every 100 ms)	10 ms (CMC reads modules every 100 ms)
Weight	42 g	62,5 g
Part number	M99-U16-001	M141-U24-001

MultiCon

Input modules - voltage/current

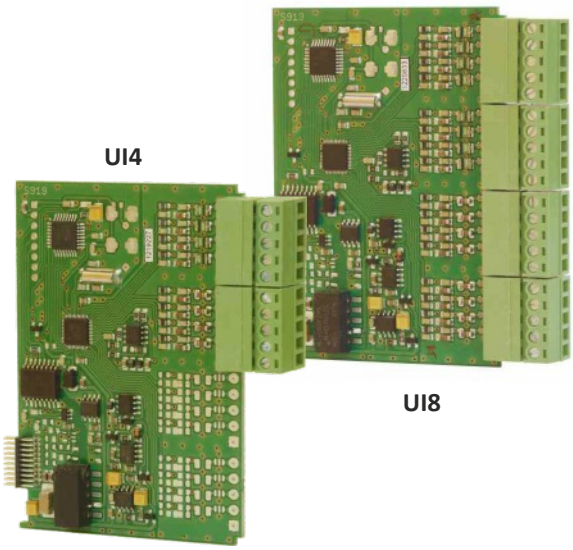

- **UI4**: 4 voltage + 4 current inputs
- **UI8**: 8 voltage + 8 current inputs
- **UI12**: 12 voltage + 12 current inputs

The MultiCon **UI** modules include 8, 16 or 24 voltage / current inputs, mixed where half of them are voltage and half are current.
To make sensor connection easier, inputs are grouped and all ground terminals are common but separated from power supply and other modules.

Voltage / current inputs parameters are:
- **Name** - read-only input name given by the device,
- **Unit** - read-only field which displays unit of measurement,
- **Mode** - defines measurement range,
- **Low limit** - defines measurement level below which in logical channel „Lo" state will be displayed,
- **High limit** - defines measurement level above which in logical channel „Hi" state will be displayed.

MODULE PIN ASSIGNMENT

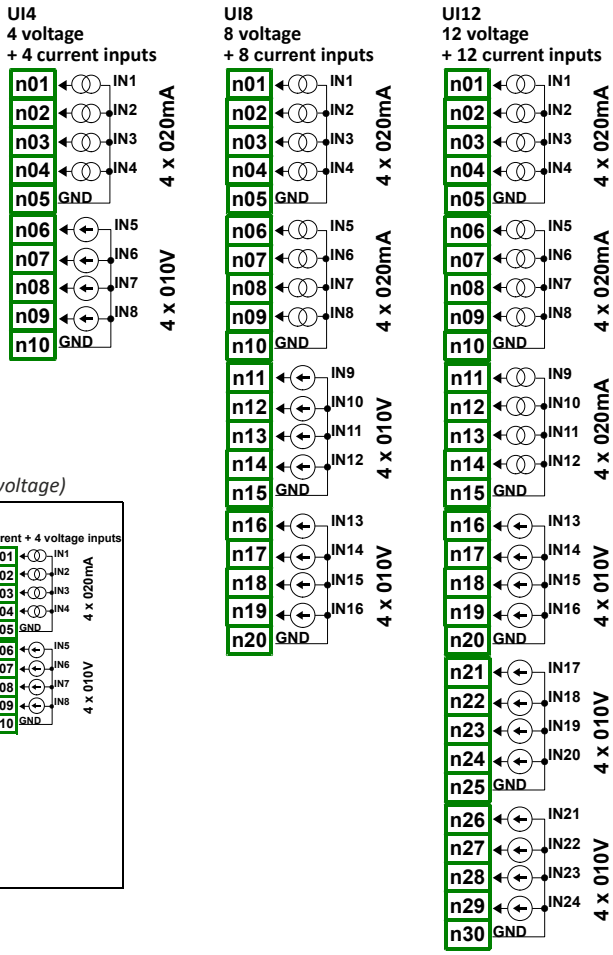

Connections for 3 - wire sensor (current)

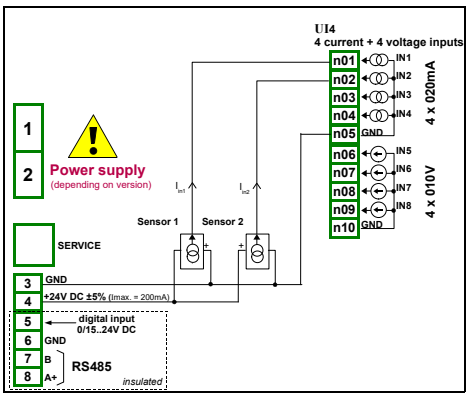

Connections for 3 - wire sensor (voltage)

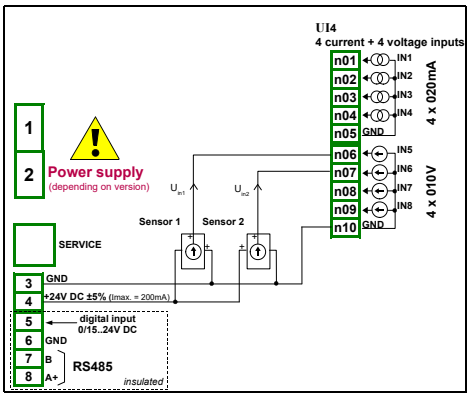

TECHNICAL DATA

	UI4	UI8	UI12
Number of inputs	4 x voltage + 4 x current	8 x voltage + 8 x current	12 x voltage + 12 x current
Measurement range Hardware limitation	voltage: 0 ÷ 5V, 1 ÷ 5V, 0 ÷ 10V, 2 ÷ 10V; current: 0 ÷ 20 mA, 4 ÷ 20 mA voltage: 0V ÷ 12V; current: 0 mA ÷ 24 mA	voltage: 0 ÷ 5V, 1 ÷ 5V, 0 ÷ 10V, 2 ÷ 10V; current: 0 ÷ 20 mA, 4 ÷ 20 mA voltage: 0V ÷ 12V; current: 0 mA ÷ 24 mA	voltage: 0 ÷ 5V, 1 ÷ 5V, 0 ÷ 10V, 2 ÷ 10V; current: 0 ÷ 20 mA, 4 ÷ 20 mA voltage: 0V ÷ 12V; current: 0 mA ÷ 24 mA
Hardware resolution	voltage: 1 mV; current: 1 µA	voltage: 1 mV; current: 1 µA	voltage: 1 mV; current: 1 µA
Precision	0.1% @ 25°C	0.1% @ 25°C	0.1% @ 25°C
Internal impedance	voltage: 50 kΩ; current: type 100 Ω	voltage: 50 kΩ; current: type 100 Ω	voltage: 50 kΩ; current: type 100 Ω
Protection	voltage: no; current: 50 mA, auto-reset fuse	voltage: no; current: 50 mA, auto-reset fuse	voltage: no; current: 50 mA, auto-reset fuse
Sampling period	10 ms, CMC reads modules every 100 ms	10 ms, CMC reads modules every 100 ms	10 ms, CMC reads modules every 100 ms
Weight	32 g	43 g	62 g
Part number	M99-UI4-001	M99-UI8-001	M141-UI12-001

*

MultiCon

Input modules - voltage/current/NTC

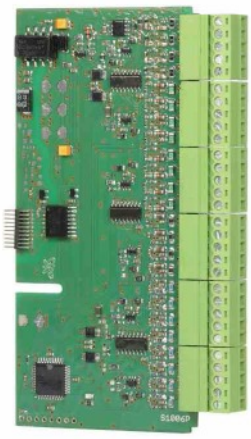

- **UI4N8:** 4 voltage + 4 current + 8 NTC inputs
- **UI8N8:** 8 voltage + 8 current + 8 NTC inputs

The MultiCon **UIN** modules include 16 or 24 voltage / current / NTC inputs, which allows to measure current, voltage, resistance and temperature (using NTC sensors). Inputs are gathered into groups to make connections easier. All ground terminals of a particular module are common, but separated from power supply and other modules. If it is necessary to make measurements with different ground potentials, several UIN modules have to be installed into MultiCon unit.

Voltage / current / NTC (temperature or resistance measurement) inputs parameters are:
- **Name** - read-only input name given by the device („mA", „V", „°C" or „Ω"),
- **Unit** - read-only field which displays unit of measurement,
- **Mode** - defines measurement range,
- **Low limit** - defines measurement level below which in logical channel „Lo" state will be displayed,
- **High limit** - defines measurement level above which in logical channel „Hi" state will be displayed.

Additionally for temperature mode:
NTC Equation - allows to choose method of entering thermistor characteristic. There are two possibilities: equation with Beta parameter and equation based on Steinhart-Hart coefficients.

When NTC inputs are used, it is recommended to use shielded wires and connect shield to GND connector on the module.

MODULE PIN ASSIGNMENT

UI4N8
4 voltage + 4 current + 8 NTC inputs

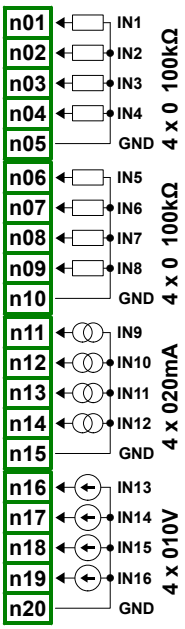

UI8N8
8 voltage + 8 current + 8 NTC inputs

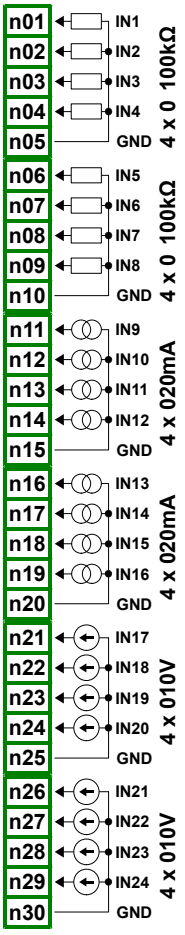

TECHNICAL DATA

	UI4N8	UI8N8
Number of inputs	4 x voltage + 4 x current + 8 x resistance NTC	8 x voltage + 8 x current + 8 x resistance NTC
Measurement range	voltage inputs: 0 ÷ 5V, 1 ÷ 5V, 0 ÷ 10V, 2 ÷ 10V current inputs: 0 ÷ 20 mA, 4 ÷ 20 mA resistance inputs: 0 ÷ 100 kΩ	voltage inputs: 0 ÷ 5V, 1 ÷ 5V, 0 ÷ 10V, 2 ÷ 10V current inputs: 0 ÷ 20 mA, 4 ÷ 20 mA resistance inputs: 0 ÷ 100 kΩ
Hardware limitation	voltage: 0 ÷ 12V; current: 0 ÷ 24mA; resistance: 0 ÷ 110kΩ	voltage: 0 ÷ 12V; current: 0 ÷ 24mA; resistance: 0 ÷ 110kΩ
Hardware resolution	voltage: 1 mV; current: 1 µA; resistance: 4 Ω	voltage: 1 mV; current: 1 µA; resistance: 4 Ω
Temp. stability	50 ppm/˚C	50 ppm/˚C
Precision	0,1% @ 25°C	0,1% @ 25°C
Internal impedance	voltage: 61 kΩ; current: 100 Ω; resistance: 121 kΩ	voltage: 61 kΩ; current: 100 Ω; resistance: 121 kΩ
Protection	voltage/NTC: protection resistor current: 50 mA, auto-reset fuse	voltage/NTC: protection resistor current: 50 mA, auto-reset fuse
Sampling period	100 ms	100 ms
Weight	43 g	62 g
Part number	M99-UI4N8-001	M141-UI8N8-001

MultiCon

Input modules - voltage/current/digital

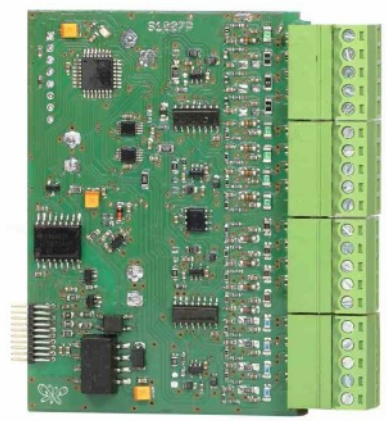

- **UI4D8:** 4 voltage + 4 current + 8 digital inputs
- **UI8D8:** 8 voltage + 8 current + 8 digital inputs

The MultiCon **UID** modules include 16 or 24 voltage / current / digital inputs, which allows to measure current and voltage and can be equipped with uninsulated digital inputs. Inputs are gathered into groups to make connections easier. All ground terminals of a particular module are common, but separated from power supply and other modules. If it is necessary to make measurements with different ground potentials, several UID modules have to be installed into MultiCon unit.

Voltage / current inputs parameters are:
- **Name** - read-only input name given by the device,
- **Unit** - read-only field which displays unit of measurement („mA", „V"),
- **Mode** - defines measurement range,
- **Low limit** - defines measurement level below which in logical channel „Lo" state will be displayed,
- **High limit** - defines measurement level above which in logical channel „Hi" state will be displayed.

Digital inputs parameters are:
- **Mode** - defines input voltage ranges (TTL: „0" for 0 ÷ 0,8V; „1" for 2 ÷ 5.5V and HTL: „0" for 0÷4,2V; „1" for 11,5÷30V),
- **Filter time** - defines minimal time that has to elapse from last input state change, if this change wants to be noticed. Each input has the possibility to sets its own Filter time, even if this input is part of another, different set of this parameter do not disturbs their work.

MODULE PIN ASSIGNMENT

UI4D8
4 voltage + 4 current + 8 digital inputs

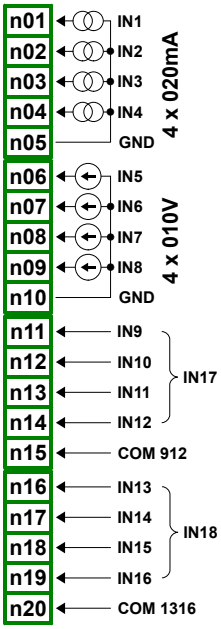

UI8D8
8 voltage + 8 current + 8 digital inputs

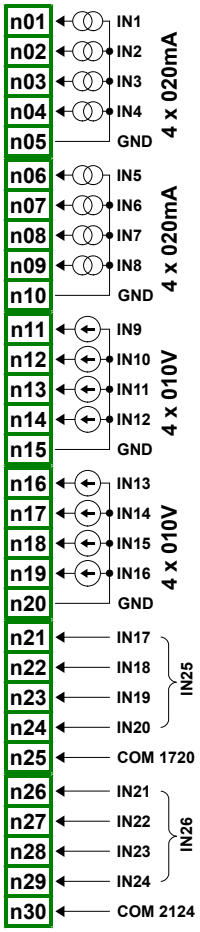

TECHNICAL DATA

	UI4D8	UI8D8
Number of inputs	4 x voltage + 4 x current + 8 x digital	8 x voltage + 8 x current + 8 x digital
Measurement range	voltage inputs: 0 ÷ 5V, 1 ÷ 5V, 0 ÷ 10V, 2 ÷ 10V current inputs: 0 ÷ 20 mA, 4 ÷ 20 mA digital inputs: TTL: Lo: 0 ÷ 0,8V, Hi: 2 ÷ 5,5V HTL: Lo: 0 ÷ 4,2V, Hi: 11,5 ÷ 30V	voltage inputs: 0 ÷ 5V, 1 ÷ 5V, 0 ÷ 10V, 2 ÷ 10V current inputs: 0 ÷ 20 mA, 4 ÷ 20 mA digital inputs: TTL: Lo: 0 ÷ 0,8V, Hi: 2 ÷ 5,5V HTL: Lo: 0 ÷ 4,2V, Hi: 11,5 ÷ 30V
Hardware limitation	voltage: 0 ÷ 12V; current: 0 ÷ 24mA; digital: 0 ÷ 32V	voltage: 0 ÷ 12V; current: 0 ÷ 24mA; digital: 0 ÷ 32V
Hardware resolution	voltage: 1 mV; current: 1 µA	voltage: 1 mV; current: 1 µA
Temp. stability	50 ppm/˚C	50 ppm/˚C
Precision	0,1% @ 25°C (voltage/current), 2% @ 25°C (digital)	0,1% @ 25°C (voltage/current), 2% @ 25°C (digital)
Internal impedance	voltage: 61 kΩ; current: 100 Ω; digital: 80 kΩ	voltage: 61 kΩ; current: 100 Ω; digital: 80 kΩ
Protection	voltage/digital: protection resistor current: 50 mA, auto-reset fuse	voltage/digital: protection resistor current: 50 mA, auto-reset fuse
Sampling period	100 ms	100 ms
Weight	43 g	62 g
Part number	M99-UI4D8-001	M141-UI8D8-001

MultiCon

Input modules - thermocouple

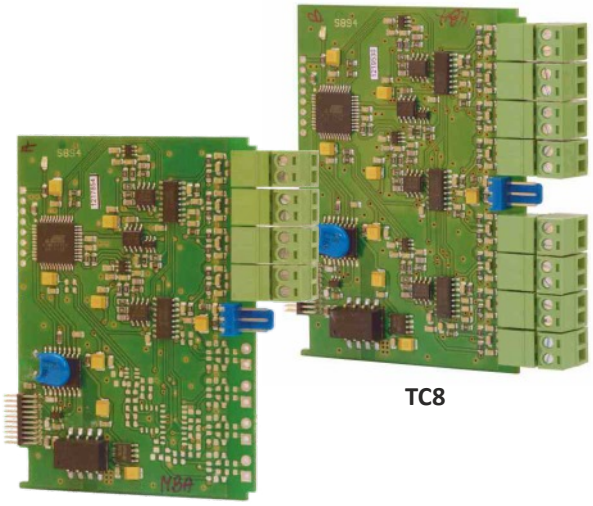

TC8

TC4

- **TC4**: 4 thermocouple inputs
- **TC8**: 8 thermocouple inputs
- **TC12**: 12 thermocouple inputs

The range of **TC** modules consist of 4, 8 and 12 thermocouple input modules, each equipped with 1 input for connectors temperature measurement. Primary destination of these modules is temperature measurement using thermocouple sensors, but it is also possible to measure voltage with typical thermocouple ranges.

TC modules parameters are:
- **Name** - read-only input name given by the device,
- **Unit** - read-only field which displays „°C" or „mV", depending on **Mode** parameter settings,
- **Mode** - allows to set type of thermocouple or mV measurement range,
- **Low limit** - defines measurement level below which in logical channel „Lo" state will be displayed,
- **High limit** - defines measurement level above which in logical channel „Hi" state will be displayed,
- **Wire compensation** - allows to compensate measurement errors, which can be caused by wrong sensor readings,
- **Compensation** - parameter which allows to manually compensate sensor error, written here value is added or subtracted from measured sensor value,
- **Actual temperature** - parameter in which user enters actual temperature near the sensor, which is measured by a more reliable thermometer,
- **Compensate** - button which activates the compensation,
- **Compensation** - read only parameter; displays voltage value calculated to compensate temperature measurement.

MODULE PIN ASSIGNMENT

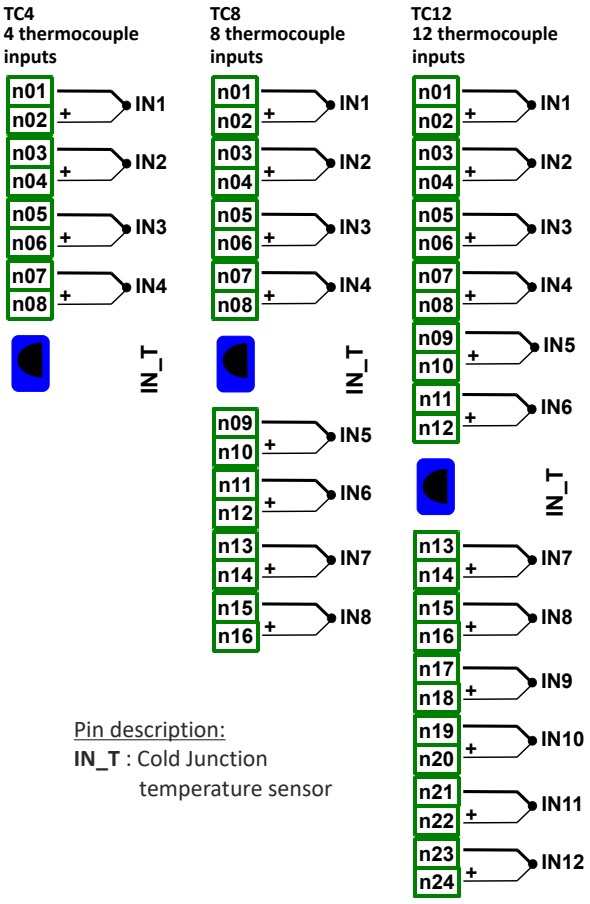

Pin description:
IN_T : Cold Junction temperature sensor

TECHNICAL DATA

	TC4	TC8	TC12
Number of inputs	4	8	12
Measurement range Hardware limitation	thermocouple J, K, S, T, N, R, B, E (PN-EN), L (GOST); voltage: -10 ÷ 25 mV, ±25 mV, -10 ÷ 100 mV, ±100 mV -30 mV ÷ 30 mV, -120 mV ÷ 120 mV	thermocouple J, K, S, T, N, R, B, E (PN-EN), L (GOST); voltage: -10 ÷ 25 mV, ±25 mV, -10 ÷ 100 mV, ±100 mV -30 mV ÷ 30 mV, -120 mV ÷ 120 mV	thermocouple J, K, S, T, N, R, B, E (PN-EN), L (GOST); voltage: -10 ÷ 25 mV, ±25 mV, -10 ÷ 100 mV, ±100 mV -30 mV ÷ 30 mV, -120 mV ÷ 120 mV
Hardware resolution	1 µV (± 30 mV), 4 µV (± 120 mV)	1 µV (± 30 mV), 4 µV (± 120 mV)	1 µV (± 30 mV), 4 µV (± 120 mV)
Voltage precision	0,1% @ 25°C	0,1% @ 25°C	0,1% @ 25°C
Permissible long time overload	20%	20%	20%
Permissible voltage difference	0.5 V between channels	0.5 V between channels	0.5 V between channels
Input impedance	typ. 1 MΩ	typ. 1 MΩ	typ. 1 MΩ
Sampling period	385 ms *	385 ms *	385 ms *
Weight	32 g	42 g	52 g
Part number	M99-TC4-001	M99-TC8-001	M141-TC12-001

** CMC reads data from modules every 100 ms*

MultiCon

Input modules - R
TD

RT4

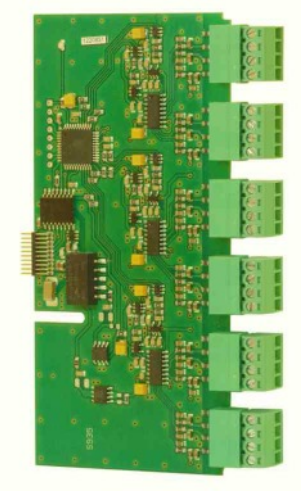

RT6

- **RT4**: 4 RTD inputs
- **RT6**: 6 RTD inputs

The range of **RTD** modules consist of 4 and 6 RTD input modules. These inputs are used for temperature measurement using RTD type temperature sensors (by 2-, 3- and 4-wire method), or for resistance measurement in the ranges up to 3kΩ. The RT modules cooperate with many kinds of resistance thermometers and thanks to this, there is no need to change the module when another temperature sensor has been used, the user only needs to change the settings in the MultiCon unit.

MODULE PIN ASSIGNMENT

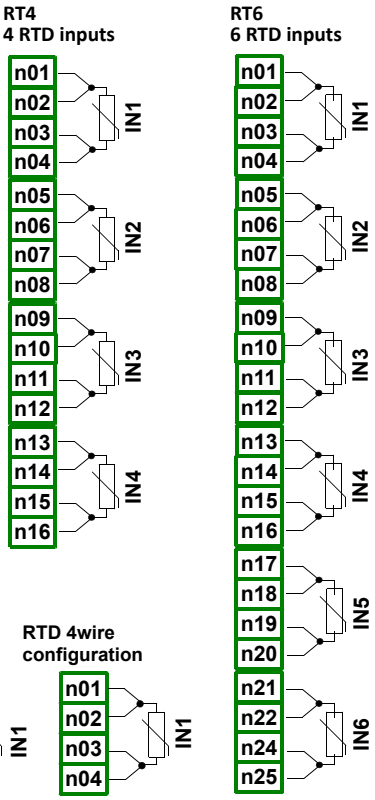

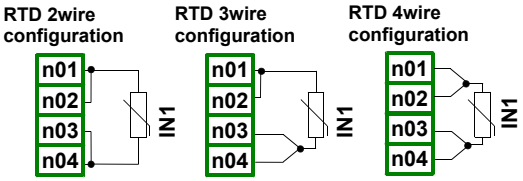

RT4 and **RT6** modules parameters are:
- **Name** - read-only input name given by the device,
- **Unit** - read-only field which displays „°C” when **Mode** parameter is set on temperature measurement, or displays „Ω” when **Mode** parameter is set on resistance measurement,
- **Mode** - defines which sensor is used for measurement, or what is the resistance measurement range and what is the method of these measurements,
- **Low limit** - defines measurement level below which in logical channel „Lo” state will be displayed,
- **High limit** - defines measurement level above which in logical channel „Hi” state will be displayed.

Schematic diagram for the RT4 module and MB1 Modbus port

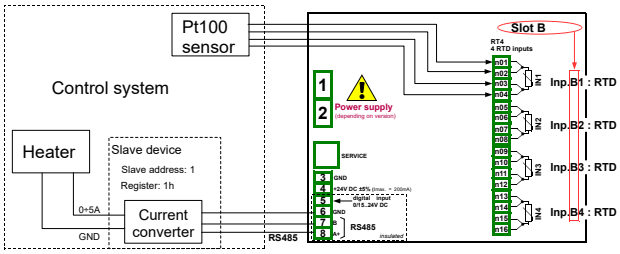

TECHNICAL DATA

	RT4	RT6
Number of inputs	4	6
Measurement range	Pt100, Pt500, Pt1000 (PN-EN); Pt'50, Pt'100, Pt'500 (GOST) Ni100, Ni500, Ni1000 (PN-EN) Cu50, Cu100, Cu'50, Cu'100 (PN-83M-53852) resistance: 0 ÷ 300 Ω, 0-3 kΩ	Pt100, Pt500, Pt1000 (PN-EN); Pt'50, Pt'100, Pt'500 (GOST) Ni100, Ni500, Ni1000 (PN-EN) Cu50, Cu100, Cu'50, Cu'100 (PN-83M-53852) resistance: 0 ÷ 300 Ω, 0-3 kΩ
Temperature range	-100 ÷ 600°C (Pt100, Pt500, Pt1000) -200 ÷ 600°C (Pt'50, Pt'100, Pt'500) -50 ÷ 200°C (Cu50, Cu100); -200 ÷ 200°C (Cu'50, Cu'100) -60 ÷ 180°C (Ni100, Ni500, Ni1000)	-100 ÷ 600°C (Pt100, Pt500, Pt1000) -200 ÷ 600°C (Pt'50, Pt'100, Pt'500) -50 ÷ 200°C (Cu50, Cu100); -200 ÷ 200°C (Cu'50, Cu'100) -60 ÷ 180°C (Ni100, Ni500, Ni1000)
Resistance precision	0,1% @ 25°C	0,1% @ 25°C
Connection method	2, 3 and 4 wire (switched manually)	2, 3 and 4 wire (switched manually)
Sampling period	1 s *	1 s *
Weight	42 g	57 g
Part number	M99-RT4-001	M141-RT6-001

** CMC reads data from modules every 100 ms*

MultiCon

Input modules - digital

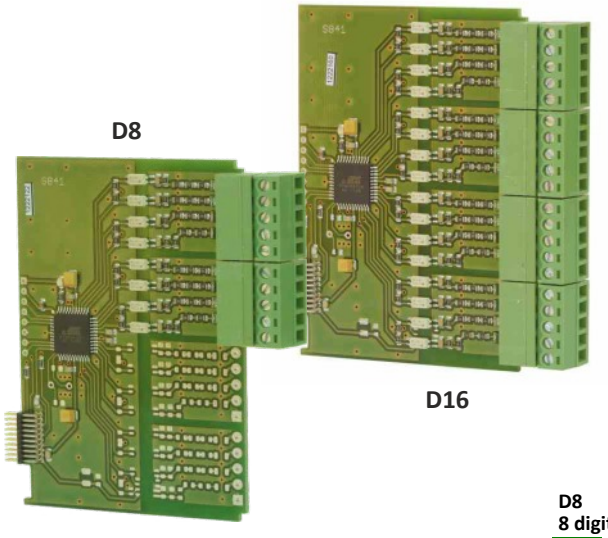

- **D8**: 8 isolated digital inputs
- **D16**: 16 isolated digital inputs
- **D24**: 24 isolated digital inputs

On customer's request, the MultiCon device can be equipped with modules having 8, 16 or 24 digital inputs. These inputs can be used singly, in groups of four or all inputs available in the module. The measurement results are presented in decimal system.

D modules parameters are:
- **Name** - read-only input name given by the device,
- **Filter time** - defines minimal time that has to elapse from last input state change, if this change wants to be noticed.

MODULE PIN ASSIGNMENT

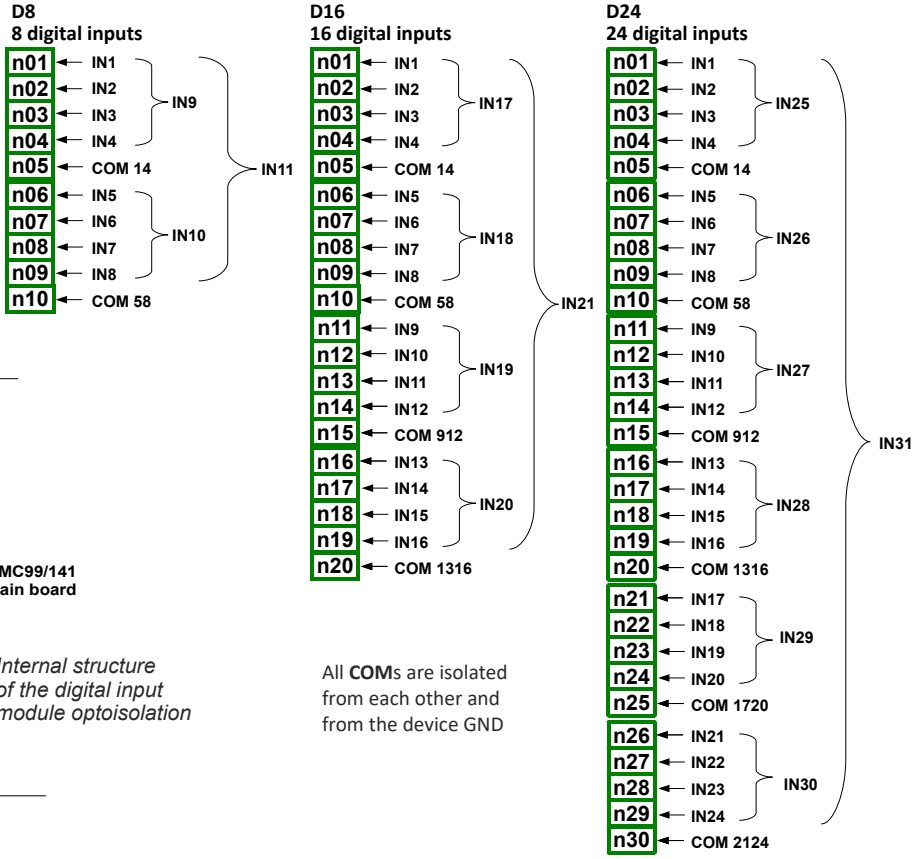

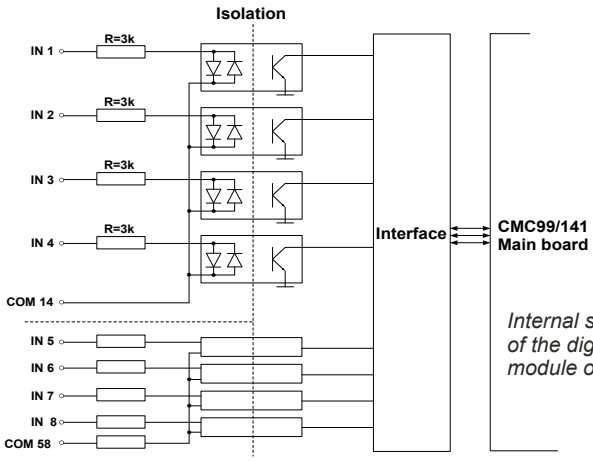

Internal structure of the digital input module optoisolation

All **COM**s are isolated from each other and from the device GND

TECHNICAL DATA

	D8	D16	D24
Number of inputs	8 (2 groups of 4 inputs each, isolated from others signals)	16 (4 groups of 4 inputs each, isolated from others signals)	24 (6 groups of 4 inputs each, isolated from other signals)
Input signals voltage levels	| Uin | < 1V (logical LOW state) | Uin | > 4V (logical HIGH state)	| Uin | < 1V (logical LOW state) | Uin | > 4V (logical HIGH state)	| Uin | < 1V (logical LOW state) | Uin | > 4V (logical HIGH state)
Input voltage max.	30V	30V	30V
Input current (typically)	15 mA @24V; 5 mA @10V; 2 mA @5V	15 mA @24V; 5 mA @10V; 2 mA @5V	15 mA @24V; 5 mA @10V; 2 mA @5V
Insulation strength	500V	500V	500V
Sampling frequency	3 kHz *	3 kHz *	3 kHz *
Input signals representation	8 single bits: IN1-IN8; two 4-bit groups: IN9-IN10; 1 byte: IN11	16 single bits: IN1-IN16; four 4-bit groups: IN17-IN20; 1 integer: IN21	24 single bits: IN1-IN24; six 4-bit groups: IN25-IN30; 1 integer: IN31
Weight	30 g	40 g	58 g
Part number	M99-D8-001	M99-D16-001	M141-D24-001

** CMC reads state of inputs every 100 ms*

MultiCon

Input modules - universal counters

- **CP2**: 2 isolated universal counters
- **CP4**: 4 isolated universal counters

The MultiCon can be also equipped with modules having 2 or 4 universal counters. Each counter can be configured independently and has two counting inputs (**Inp[n]1**, **Inp[n]2**), programmable input (**Prog[n]**), reset input (**Res[n]**), where „n" means counter number from 1 to 4.

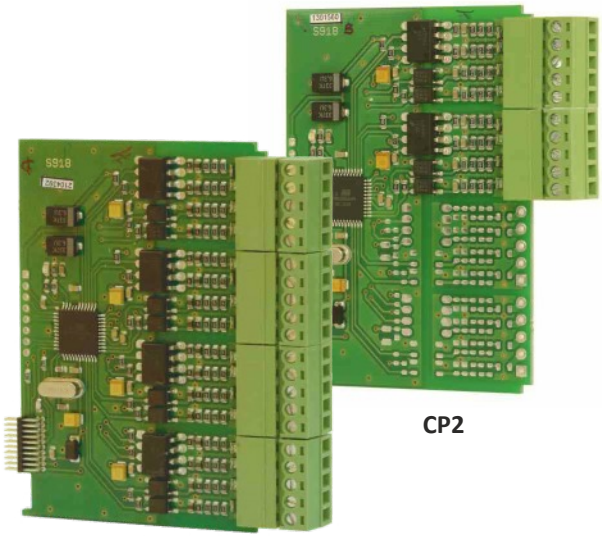

CP2

CP4

The counter parameters are:
- **Name** - read-only input name given by the device,
- **Unit** - read-only field which displays measurement unit: pulses,
- **Low Limit** - value determining amount of pulses, below which in logical channel „Lo" state will be displayed,
- **High Limit** - value determining amount of pulses, above which in logical channel „Hi" state will be displayed,
- **Function mode** - specifies the counting mode: „A + B", „A - B", „quad",
- **Reset now** - button allowing user to manually reset the counter,
- **Reset mode** - it allows to choose an additional resets for the counter, it has the following parameters: from log. channel or external,
- **Reset source** - this parameter is visible when Reset mode is set as from log. channel or both, it contains a list of logical channels and the chosen one will reset the counter when its value is higher than 0,
- **Prog. inp. mode** - specifies counter reaction on higher than 0 value appearance on Prog. input,
- **Filter** - sets filter on counter inputs which allows getting rid of negative effects of signal bounces; it has the following parameters: disable, 10 ÷ 90.

MODULE PIN ASSIGNMENT

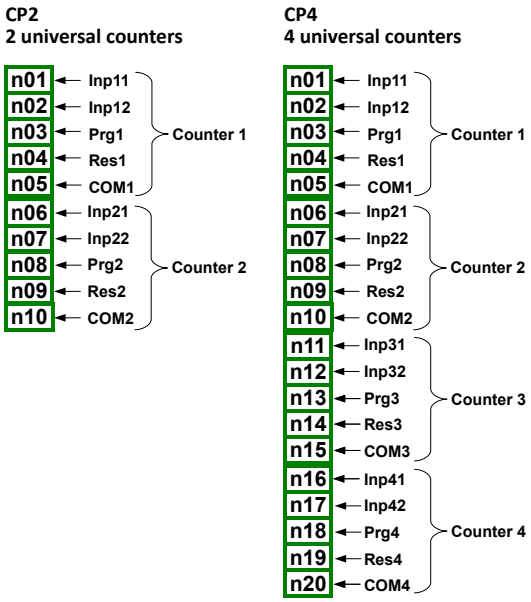

Pin description:
Inp[n]1, Inp[n]2 : counting inputs, pulse
Prg[n] : programmable inputs **Res[n]** : reset inputs
COM[n] : common inputs
[n] = counter number

TECHNICAL DATA

	CP2	CP4
Number of inputs	2 counters (2 groups x 4 inputs, every group isolated from the other signals)	4 counters (4 groups x 4 inputs, every group isolated from the other signals)
CMC counting range Module hardware limitation	$-4.5^{15} \div 4^{15}$ pulses $-2^{31} \div 2^{31}$ pulses	$-4.5^{15} \div 4^{15}$ pulses $-2^{31} \div 2^{31}$ pulses
Input signals voltage levels	| Uin | < 1V (logical LOW state) | Uin | > 10V (logical HIGH state)	| Uin | < 1V (logical LOW state) | Uin | > 10V (logical HIGH state)
Max input voltage	30V	30V
Input current (typically)	14 mA @24V; 6 mA @10V	14 mA @24V; 6 mA @10V
Insulation strength	2 kV	2 kV
Max input frequency	5 kHz* (for quad signals); 10 kHz (for other signals)	5 kHz* (for quad signals); 10 kHz (for other signals)
Protection	50 mA auto-reset fuse	50 mA auto-reset fuse
Weight	35 g	42 g
Part number	M99-CP2-001	M99-CP4-001

** CMC reads result every 100 ms*

MultiCon

Input modules - hourmeters

- **HM2**: 2 isolated hourmeters
- **HM4**: 4 isolated hourmeters

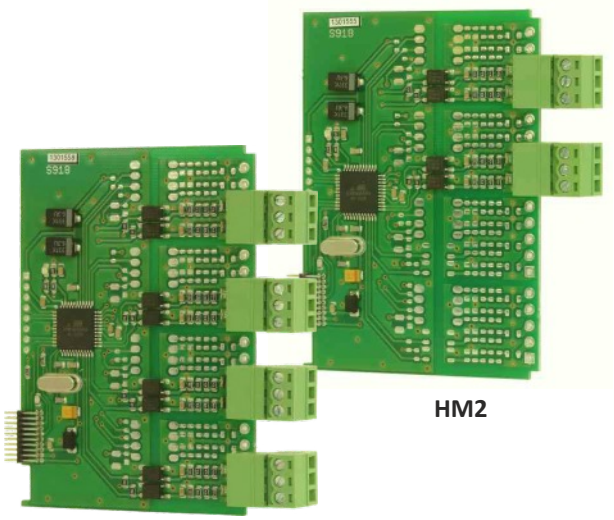

HM2

HM4

The **HM2** and **HM4** are the hourmeters modules developed for the MultiCon units. Allow to measure period of time between **START** and **STOP** signals, as well as sum of periods. These modules are ideal solution to control working time of a machinery, duration of phenomena or for maintenance purposes. They have 2 or 4 independent couters. Each counter is equipped with 2 inputs - **START/STOP** and **PRG** (programmable), which can be set as asynchronous **RESET**, **HOLD** or used as independent digital input.

HM counters parameters are:
- **Name** - read-only input name given by the device,
- **Unit** - read-only parameter which displays measurement unit: sec.,
- **Mode** - read-only parameter, displays measured physical quantity: Time,
- **Low Limit** - value determining time, below which in logical channel „Lo" state will be displayed,
- **High Limit** - value determining time, above which in logical channel „Hi" state will be displayed,
- **Start/Stop inp. trig.** - allows to define, when the device should start or stop counting, options: high level, low level, rising edge, falling edge,
- **Reset now** - button allowing user to manually reset the counter,
- **Reset mode** - parameter allowing choose an additional resets for the counter, it has the following options: disable, from log. channel external or both,
- **Reset source** - this parameter is visible when Reset mode is set as from log. channel or both, it contains a list of logical channels and the chosen one will reset the counter when its value is higher than 0,
- **Prog. inp. mode** - specifies counter reaction on active signal appearance on Prog. input, options: binary input, reset, inhibit,
- **Prog. inp. trig.** - allows to define when the device should reset or inhibit time counter, options: high level, low level, rising edge, falling edge,
- **Filter** - sets filter on counter inputs which allows to getting rid of negative effects of signal bounces; it has the following parameters: disable, 10 ÷ 90.

MODULE PIN ASSIGNMENT

HM2
2 hourmeters

n01	START/STOP 1
n02	PRG 1
n03	COM 1
n04	START/STOP 2
n05	PRG 2
n06	COM 2

HM4
4 hourmeters

n01	START/STOP 1
n02	PRG 1
n03	COM 1
n04	START/STOP 2
n05	PRG 2
n06	COM 2
n07	START/STOP 3
n08	PRG 3
n09	COM 3
n10	START/STOP 4
n11	PRG 4
n12	COM 4

Pin description:
START/STOP [n] - input which starts and stops time counting,
PRG [n] : programmable input
COM [n] : common terminal
[n] = counter number

TECHNICAL DATA

	HM2	HM4
Number of inputs	2 hourmeters	4 hourmeters
CMC counting range	0 - 10^9 sec.	0 - 10^9 sec.
Input signals voltage levels	| Uin | < 1V (logical LOW state) | Uin | > 10V (logical HIGH state)	| Uin | < 1V (logical LOW state) | Uin | > 10V (logical HIGH state)
Max input voltage	30V	30V
Input current (typically)	14 mA @24V; 6 mA @10V	14 mA @24V; 6 mA @10V
Insulation strength	2 kV	2 kV
Precision / Temp. stability	±30 ppm @ +25°C / ±50 ppm/K	±30 ppm @ +25°C / ±50 ppm/K
Max input frequency	1 kHz	1 kHz
Protection	50 mA auto-reset fuse	50 mA auto-reset fuse
Weight	28 g	33 g
Part number	M99-HM2-001	M99-HM4-001

MultiCon

Input modules - analogue flowmeters

FI2

- **FI2**: 2 analogue flowmeters + 2 current inputs
- **FI4**: 4 analogue flowmeters + 4 current inputs

The **FI** modules have been especially designed for the MultiCon units used in flow measurement applications. They allow user to display and record both actual flow (rate) and total flow (volume).
These modules have extra 2 or 4 analogue inputs for general purpose use. Each flow channel is equipped with **IN[n]** input and common ground **GND**. All inputs are galvanically separated from the device, however have common ground. The user can, thanks to Scaling parameter in Logical channel, interpret measured current by the device at its discretion, which allows to cooperate with any kind of analogue output sensors. The general purpose use current inputs have common ground and they are isolated from the supply voltage and other modules.

Analogue flowmeter parameters are:
- **Name** - read-only input name given by the device,
- **Unit** - read-only field which displays measurement unit,
- **Base unit** - defines unit which is used by the totalizer (for example when flow measurement unit is m3/s, the base unit is „m3") ,
- **Mode** - defines current range of selected input (0÷20 mA, 4÷20 mA) and the time base which is used during the measurement,
- **Low limit** - value which determines measured current, below which in logical channel „Lo" state will be displayed,
- **High limit** - value which determines measured current, above which in logical channel „Hi" state will be displayed,
- **Balance** - submenu which contains totalizer settings:
  - **Reset now** - manual reset of the totalizer,
  - **Reset mode** - turns on and off reset from logical channel,
  - **Reset source** - allows to choose a logical channel from the list, which will reset the totalizer, when value in this channel will be greater than 0,
  - **Strobe mode** - turns on and off balance calculating from logical channel,
  - **Strobe source** - allows to choose logical channel from the list, which will hold balance calculating in totalizer,
  - **Counting direction** - turns on and off change of the counting direction,
  - **Direction source** - allows to choose a logical channel from the list, which will change the counting direction.

MODULE PIN ASSIGNMENT

FI2
2 flowmeter inputs
+ 2 current inputs

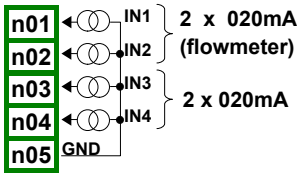

FI4
4 flowmeter inputs
+ 4 current inputs

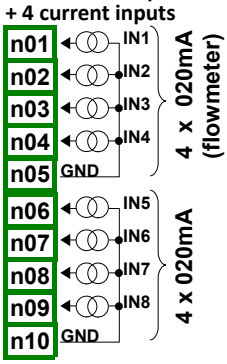

TECHNICAL DATA

	FI2	FI4
Number of inputs	2 x analogue flowmeter + 2 x current	4 x analogue flowmeter + 4 x current
Measurement range Hardware limitation	flow input modes: 0 ÷ 20 mA, 4 ÷ 20 mA flow input units: 1/sec, 1/min, 1/h current input: 0 ÷ 20 mA, 4 ÷ 20 mA current: 0 mA ÷ 24 mA	flow input modes: 0 ÷ 20 mA, 4 ÷ 20 mA flow input units: 1/sec, 1/min, 1/h current input: 0 ÷ 20 mA, 4 ÷ 20 mA current: 0 mA ÷ 24 mA
Hardware resolution	current: 1 µA	current: 1 µA
Precision	0.1% @ 25°C	0.1% @ 25°C
Internal impedance	current: typ. 100 Ω	current: typ. 100 Ω
Protection	current: 50 mA, auto-reset fuse	current: 50 mA, auto-reset fuse
Sampling period	50 ms *	50 ms *
Weight	28 g	33 g
Part number	M99-FI2-001	M99-FI4-001

** CMC reads result every 100 ms*

MultiCon

Input modules - pulse flow or ratemeters

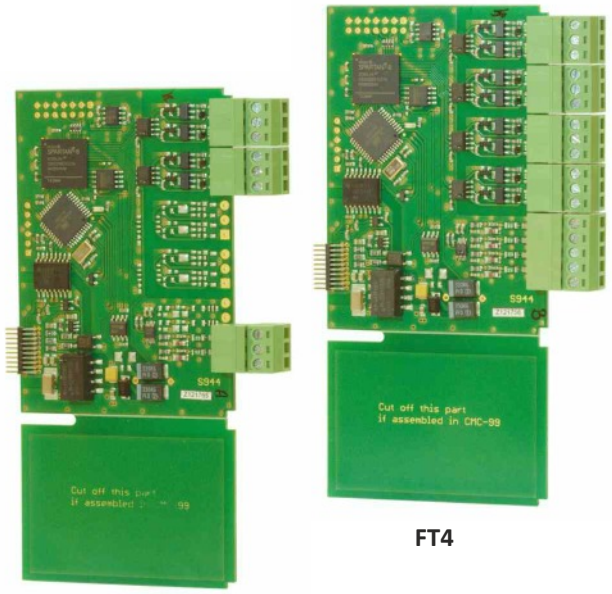

FT4

FT2

FT2: 2 isolated pulse flow or ratemeters
+ 2 current inputs

FT4: 4 isolated pulse flow or ratemeters
+ 4 current inputs

The **FT** modules have been especially designed for the MultiCon units used in flow or rate measurement applications. They allow user to display and record both actual flow (rate) and total flow (volume). These modules have extra 2 or 4 analogue inputs for general purpose use. Each pulse channel is equipped with counting inputs: **Inp[n]1**, **Inp[n]2** and common ground **COM[n]**. All pulse channels are galvanically separated from the device and from themselves. The general purpose use current inputs have common ground and they are isolated from the supply voltage and other modules. FT2 and FT4 modules can be used also as high speed **quadrature counters**.

Pulse flow or ratemeters parameters are:
- **Name** - read-only input name given by the device,
- **Unit** - read-only field which displays the time base of the measurement,
- **Base unit** - defines unit which is used by the totalizer (for example when flow measurement unit is m3/s, the base unit is „m3") ,
- **Mode** - defines the time base which is used during the measurement (pulses per second, pulses per minute, pulses per hour),
- **Low limit** - value which determines amount of pulses, below which in logical channel „Lo" state will be displayed,
- **High limit** - value which determines amount of pulses, above which in logical channel „Hi" state will be displayed,
- **Counting mode** - defines how the device should interpret signals on pulse inputs, it has the following options: with direction input, quad 1, quad 4,
- **Filter** - defines maximal frequency (with 50% duty cycle) the device will measure, options: disable, 10 Hz, 25 Hz, 50 Hz, 100 Hz, 1 kHz, 5 kHz, 10 kHz, 50 kHz,
- **Zero time** - maximal awaiting time for the next pulse. If this time is exceeded the device will display 0 value; it has the following options: 0.1 sec., 1 sec., 10 sec.,
- **Balance** - submenu which contains totalizer settings: Reset now; Reset mode; Reset source; Strobe mode; Strobe source; Counting direction; Direction source.

MODULE PIN ASSIGNMENT

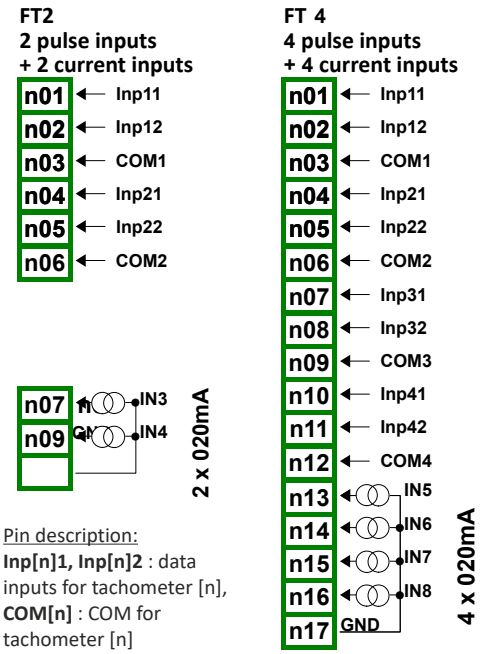

Pin description:
Inp[n]1, Inp[n]2 : data inputs for tachometer [n],
COM[n] : COM for tachometer [n]

TECHNICAL DATA

	FT2	FT4
Number of inputs	2 x pulse flow or ratemeters (isolated) + 2 x current	4 x pulse flow or ratemeters (isolated) + 4 x current
Measurement range Hardware limitation	flow / tacho input units: 1/sec, 1/min, 1/h current input: 0 ÷ 20 mA, 4 ÷ 20 mA current: 0 mA ÷ 24 mA	flow / tacho input units: 1/sec, 1/min, 1/h current input: 0 ÷ 20 mA, 4 ÷ 20 mA current: 0 mA ÷ 24 mA
Hardware resolution	current: 1 µA	current: 1 µA
Precision	0.1% @ 25°C	0.1% @ 25°C
Internal impedance	current: typ. 100 Ω	current: typ. 100 Ω
Max input frequency	flow / tacho: 50 kHz	flow / tacho: 50 kHz
Protection	current: 50 mA, auto-reset fuse	current: 50 mA, auto-reset fuse
Sampling period	50 ms *	50 ms *
Weight	42 g	50 g
Part number	M99-FT2-001	M99-FT4-001

** CMC reads result every 100 ms*

MultiCon

Output modules - current

- **IO2**: 2 current outputs, isolated, passive
- **IO4**: 4 current outputs, isolated, passive
- **IO6**: 6 current outputs, isolated, passive
- **IO8**: 8 current outputs, isolated, passive

Current output modules are used to control other devices based on current in industrial automation applications. These modules are equipped with 2, 4, 6, 8 individually isolated (one from another) passive current outputs.

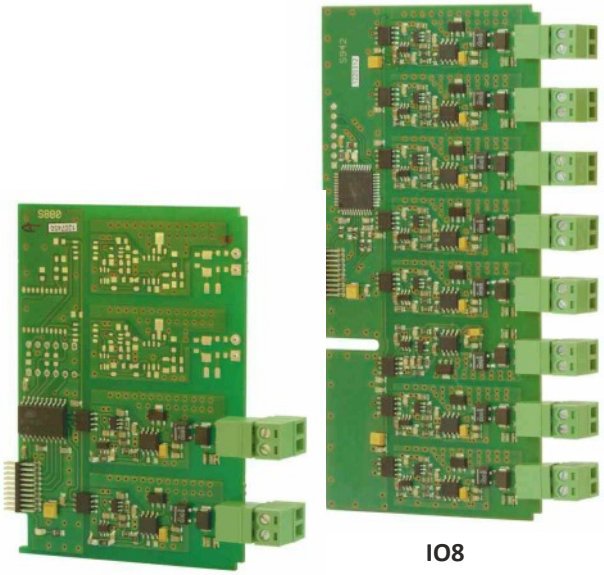

IO8

IO2

Current outputs parameters are:
- **Name** - read-only output name given by the device,
- **Unit** - current outputs have constant unit, „mA”,
- **Source** - contains a logical channels list, where selected one will be data source for current output,
- **Lower** and **Upper level (Input levels parameter block)** - limits input signal range which is downloaded from Source parameter, below this range the input signal will be equal to **Lower level** and above this range the input signal will be equal to **Upper level**,
- **Lower** and **Upper level (Output levels parameter block)** - defines output signal changes range, below this range the output signal will be equal to **Lower level** and above this range output will be equal to **Upper level**. The relationship between input and output levels is linear and limited by defined range,
- **Alarm level** - defines output value which appears when **Source** parameter returns alarm state, but it can not exceeds the hardware limit. Alarm state is when a logical channel which is data source returns Err, Lo or Hi state.

MODULE PIN ASSIGNMENT

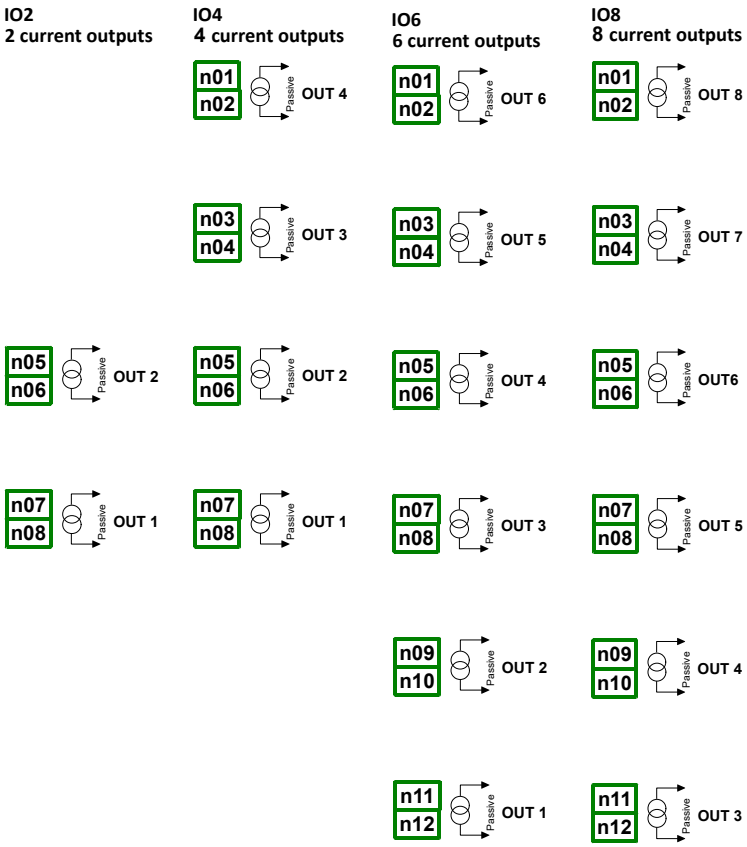

TECHNICAL DATA

	IO2	IO4	IO6	IO8
Number of outputs	2 (passive)	4 (passive)	6 (passive)	8 (passive)
Nominal analogue range	4 ÷ 20 mA *	4 ÷ 20 mA *	4 ÷ 20 mA *	4 ÷ 20 mA *
Hardware output limitation	3 ÷ 25 mA	3 ÷ 25 mA	3 ÷ 25 mA	3 ÷ 25 mA
Output voltage dropout	max. 9V	max. 9V	max. 9V	max. 9V
Loop supply range	9 ÷ 30V	9 ÷ 30V	9 ÷ 30V	9 ÷ 30V
Overload protection	Internal resettable fuse 50 mA	Internal resettable fuse 50 mA	Internal resettable fuse 50 mA	Internal resettable fuse 50 mA
Output current precision	0.1% @25°C, 50 ppm/°C	0.1% @25°C, 50 ppm/°C	0.1% @25°C, 50 ppm/°C	0.1% @25°C, 50 ppm/°C
Resolution	12 bit	12 bit	12 bit	12 bit
Insulation strength	1 min @ 500V AC	1 min @ 500V AC	1 min @ 500V AC	1 min @ 500V AC
Weight	23 g	30 g	38 g	53 g
Part number	M99-IO2-001	M99-IO4-001	M141-IO6-001	M141-IO8-001

** CMC updates output value every 100 ms*

MultiCon

Output modules - SSR

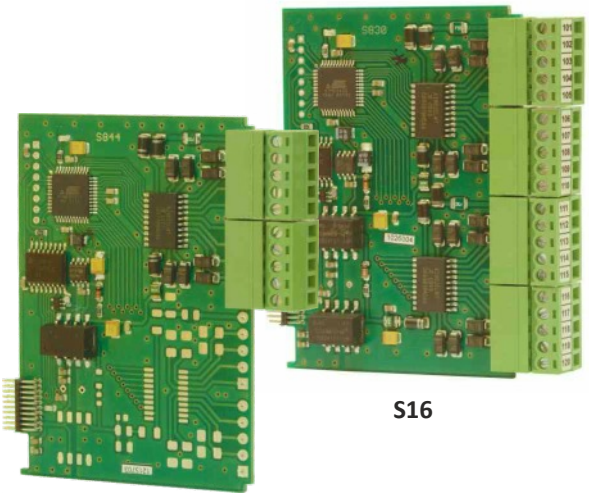

S16

S8

- **S8**: 8 x SSR outputs
- **S16**: 16 x SSR outputs
- **S24**: 24 x SSR outputs

These modules are equipped with 8, 16 or 24 **SSR** outputs. May be used to control executive device state in a simple on/off or PWM mode.

MODULE PIN ASSIGNMENT

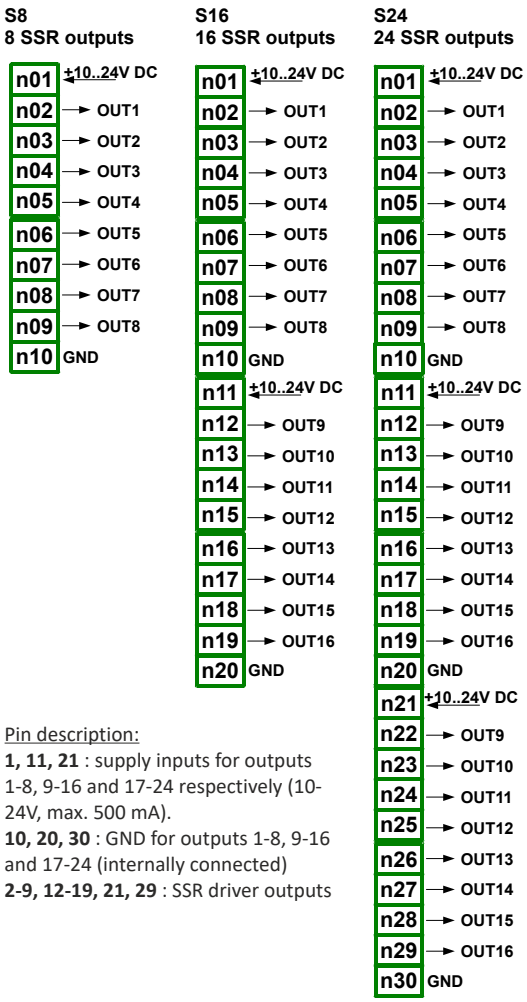

Pin description:
1, 11, 21 : supply inputs for outputs 1-8, 9-16 and 17-24 respectively (10-24V, max. 500 mA).
10, 20, 30 : GND for outputs 1-8, 9-16 and 17-24 (internally connected)
2-9, 12-19, 21, 29 : SSR driver outputs

Built-in outputs parameters in the PWM mode are:
- **Name** - read-only output name given by the device,
- **Mode** - this parameter allows the user to select method of the output operation,
- **Source** - it contains the Logical channels list, the chosen one will be data source for the relay,
- **Alarm level** - allows the user to enter value at the output in times of alarm state,
- **Level** - defines the source signal level at which the output switches the state (from low to high state or vice versa from high to low state), occurs for the mode,
- **Lower level and Upper level** - defines constant values on which depends relay state switch (for **Level mode: value**), or allows to choose a logical channels from the list, which actual value will be data for relay state switch (for **Level mode: channel**),
- **Hysteresis** - shifts relay levels with constant value, in the Relay operation mode,
- **On delay** - time which elapses from the moment when source data meets the requirements for relay switch, to actual relay's switch to active state,
- **OFF delay** - time which elapses from the moment when source data meets the requirement for relay switch, to actual relay's switch to passive state,
- **Min.ON time** - minimal time when the relay is in the active state,
- **Min.OFF time** - minimal time when the relay is in the passive state.

TECHNICAL DATA

	S8	S16	S24
Number of outputs	8	16 (in 2 groups with separate supply)	24 (in 3 groups with separate supply)
Max. current source per output	powered internally: 10 mA, sum limited to 50 mA, powered externally: 100 mA, sum limited to 500 mA	powered internally: 10 mA, sum limited to 50 mA for a group, powered externally: 100 mA, sum limited to 500 mA for a group	powered internally: 10 mA, sum limited to 50 mA for a group, powered externally: 100 mA, sum limited to 500 mA for a group
Output method	relay modes or PWM mode *	relay modes or PWM mode *	relay modes or PWM mode *
Output High Level voltage	powered internally: ≥8V powered externally: ≥(Vext. - 0.5V)	powered internally: ≥8V powered externally: ≥(Vext. - 0.5V)	powered internally: ≥8V powered externally: ≥(Vext. - 0.5V)
Overload protection	powered internally: internal fuse 50 mA, powered externally: internal fuse 500 mA	powered internally: internal fuse 50 mA (per group), powered externally: internal fuse 500 mA (per group)	powered internally: internal fuse 50 mA (per group), powered externally: internal fuse 500 mA (per group)
External output supply	30 V max.	30 V max.	30 V max.
Insulation strength	1 min @ 500V AC	1 min @ 500V AC	1 min @ 500V AC
Weight	32 g	42 g	69 g
Part number	M99-S8-001	M99-S16-001	M141-S24-001

** CMC updates output state every 100 ms*

MultiCon

Output modules - relay

- **R45**: 4 x 5A/250V relay outputs
- **R65**: 6 x 5A/250V relay outputs
- **R81**: 8 x 1A/250V relay outputs
- **R121**: 12 x 1A/250V relay outputs

The modules with relay outputs are used to switch on and off executive device circuits in the automatics. These modules are equipped with 4, 6, 8 or 12 relay outputs.

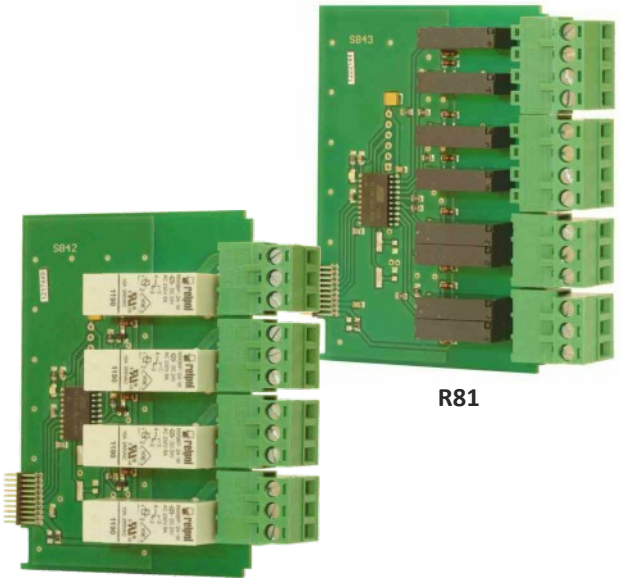

R81

R45

Relay parameters are:
- **Name** - read-only output name given by the device,
- **Mode** - read-only field which allows to choose, how the relay reacts on the source signal (**Source parameter**),
- **Source** - it contains the Logical channels list, the chosen one will be data source for the relay,
- **Alarm state** - allows to choose relay's respond for alarm state. Alarm state is when in logical channel, which is data source for the relay, returns -Err-, -Lo- or -Hi-,
- **Level mode** - allows to choose, where the data is coming from for **Level**, **Lower level** and **Upper level** parameter: value, channel,
- **Level** - defines constant signal level, exceeding which causes relay state switch, or allows to choose a Logical channel, which actual value data is for relay state switch **Level**,
- **Lower level and Upper level** - defines constant values which depends on relay state switch, or allows to choose a logical channels from the list, which actual value data is for relay state switch,
- **Hysteresis** - shifts relay levels with constant value,
- **On delay** - time which elapses from the moment when source data meets the requirements for relay switch,
- **OFF delay** - time which elapses from the moment when source data meets the requirement for relay switch,
- **Min.ON time** - minimal time when the relay is in the active state,
- **Min.OFF time** - minimal time when the relay is in the passive state.

MODULE PIN ASSIGNMENT

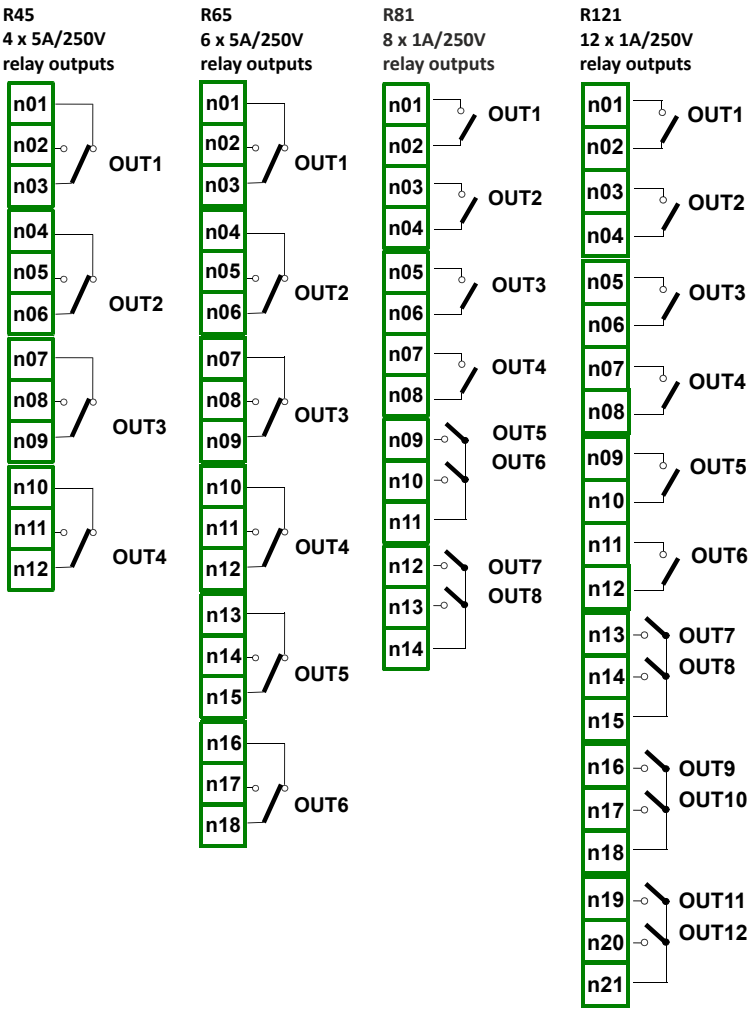

TECHNICAL DATA

	R45	R65	R81	R121
Number of relays	4 SPDP (Switchable)	6 SPDP (Switchable)	8 SPST (N.O.)	12 SPST (N.O.)
Max. load per relay	5A, cos ϕ = 1 (resistive load)	5A, cos ϕ = 1 (resistive load)	1A, cos ϕ = 1 (resistive load)	1A, cos ϕ = 1 (resistive load)
Output operation method *	disabled, above level, below level, inside range, outside range	disabled, above level, below level, inside range, outside range	disabled, above level, below level, inside range, outside range	disabled, above level, below level, inside range, outside range
Max. voltage switched by relay	250V AC	250V AC	250V AC	250V AC
Insulation strength	≤1000V AC @ 60 sec.	≤1000V AC @ 60 sec.	≤1000V AC @ 60 sec.	≤1000V AC @ 60 sec.
Weight	94 g	133 g	74 g	110 g
Part number	M99-R45-001	M141-R65-001	M99-R81-001	M141-R121-001

** CMC updates output state every 100 ms*

MultiCon

Communication modules

- **ETU**: Ethernet + USB
- **ACM**: advanced communication module
- **USB Host**

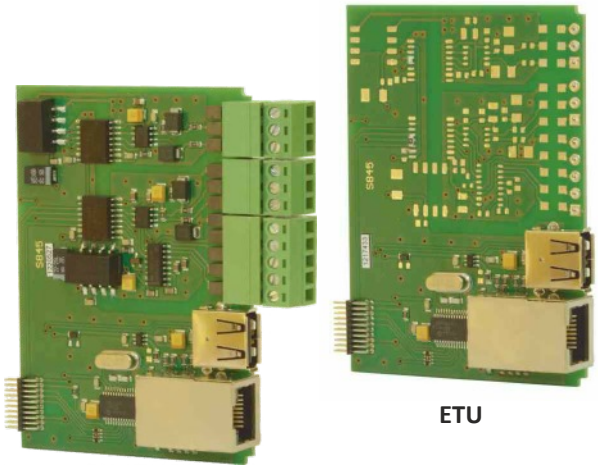

ETU

ACM

ETU communication module contains:
- **Ethernet** port, used for connection of the MultiCon with another devices or systems via LAN or WAN,
- **USB** port, used for connection of the external devices such as PC mouse, keyboard or USB flash drive.

Advanced communication module (**ACM**) contains:
- **Ethernet** port, used for connection of the MultiCon with another devices or systems via LAN or WAN,
- **USB** port, used for connection of the external devices such as PC mouse, keyboard or USB flash drive,
- additional **RS-485** port and **RS-232** port shared with third RS-485 port, used for communication with other devices using Modbus RTU protocol.

USB (back - host only)
Port used for connection of the external devices such as PC mouse, keyboard or USB flash drive.

MODULE PIN ASSIGNMENT

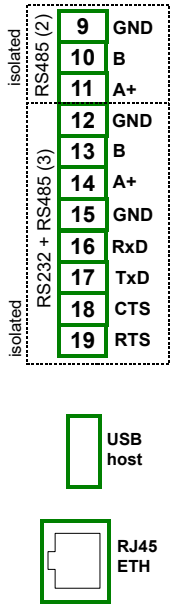

Pin description:
9 : ground for RS-485
10, 11 : data inputs for RS-485
12 : ground for RS-232
13 ÷ 19 : data inputs compatible with RS-232 standard

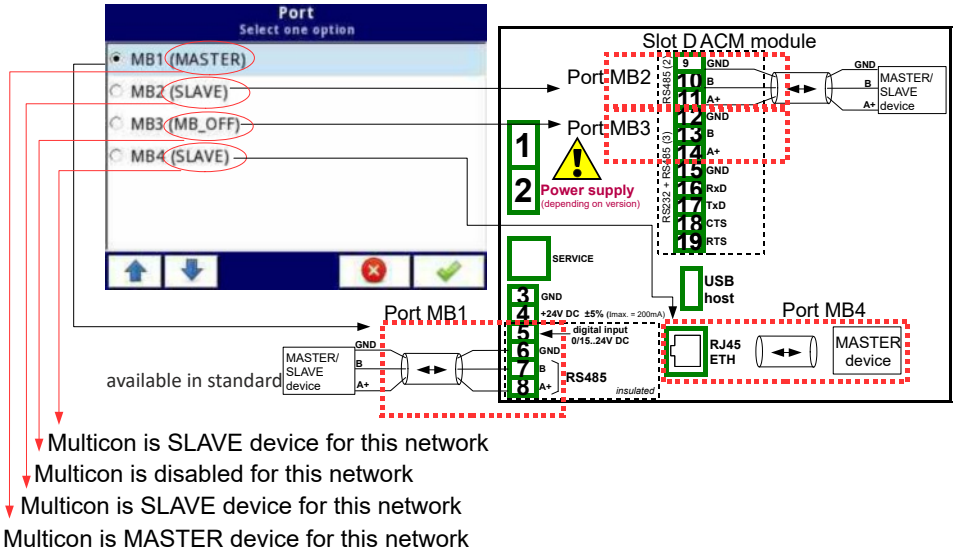

TECHNICAL DATA

	ETU	ACM	USB (back)
Number of inputs/outputs	2	4	1
Input/output type	USB Host, RJ-45 ETH	RS-485, RS-232+RS-485, USB Host, RJ-45 ETH	USB host
Hardware output limitation	USB host: max current output 100 mA	USB host: max current output 100 mA	current output 100 mA max.
Baudrate	RJ-45 ETH: 10 Mb/sec. USB host: 12 Mb/sec.	RS-485 [bit./sec.]: 1200, 2400, 4800, 9600, 19200, 38400, 57600, 115200 RJ-45 ETH: 10 Mb/sec. USB host: 12 Mb/sec.	12 Mb/sec.
Data format	-	RS-232/485: 8N1, 8N2, 8E1, 8E2, 8O1, 8O2	-
Immunity level for RJ 45	Burst (5/50ns, 5kHz): 1,5kV / 10 min (± polarization)	Burst (5/50ns, 5kHz): 1,5kV / 10 min (± polarization)	
Weight	49 g	66 g	37 g
Part number	M99-ETU-002	M99-ACM-002	M99-USB-001

Polska

Contika

SIMEX Sp. z o.o.
ul. Wielopole 11
80-556 Gdańsk
Poland
tel. (+48) 58 762-07-77
fax (+48) 58 762-07-70
e-mail: info@simex.pl
www.simex.pl
www.multicon24.eu

BRMIOEN_v1.22.071